ME-Z 829

210

General
PRESSBINDER
RE-ORDER
NO. R 118-8

ME2829
c.2

71-04-07-07

# INSTRUCTION MANUAL

EMR MODEL 210
SUBCARRIER DISCRIMINATOR
(REVISION J)

EMR TELEMETRY

BOX 3041 • SARASOTA, FLORIDA 33578

PRINTED NOVEMBER, 1970

© 1970 EMR DIVISION OF WESTON INSTRUMENTS, INC • A SCHLUMBERGER COMPANY

## NOTICE

IN THE EVENT THIS EQUIPMENT MUST BE RETURNED TO EMR FOR ANY REASON, SPECIAL CARE MUST BE EXERCISED IN PACKAGING FOR SHIPMENT. CARTON WITHIN A CARTON TYPE PACKING, WITH FOAM SUPPORT AND SEPARATORS IS RECOMMENDED TO PREVENT SHIPPING DAMAGE. SHOULD ANY INFORMATION BE REQUIRED REGARDING PACKAGING OF EMR EQUIPMENT, CONTACT EMR-TELEMETRY, SARASOTA, FLORIDA.

# MANUAL CHANGE NOTICE

July, 1969

EFFECTIVITY: Model 210 Subcarrier Discriminator

1. In Table 6-3 on page 6-6, capacitor 1C307 is now .01 Mf ±20%, 50V, Erie part number 8121-050-651-103M.

2. In Table 6-6 on page 6-11, the following capacitors now have these descriptions.

| | |
|---|---|
| 2C608 | .01 Mf ±20%, 50V |
| 2C609 | .01 Mf ±20%, 50V |
| 2C613 | .1 Mf ±20%, 50V |
| 2C702 | .1 Mf ±20%, 50V |
| 2C705 | .01 Mf ±20%, 50V |
| 2C707 | 6800 Pf ±20%, 50V |
| 2C708 | 6800 Pf ±20%, 50V |

3. In Table 6-3 on page 6-6, add inductor 1L101, EMR part number 956-1306.

4. In Figure 5-8 on page 5-26 on connector 1P1 pin J, inductor 1L101 is placed in series with the data output line above pin J where the words "data output" appear.

5. In Figure 5-10 on page 5-28 on connector 1P1 pin J, inductor 1L101 is added in line with the connector pin.

6. In Figure 5-11 on page 5-29 on connector 1P1 pin J, inductor 1L101 is placed in series with the output line where the word "out" appears.

# LIST OF EFFECTIVE PAGES

Dates of issue for the different versions are:

Revision H . . . . . May, 1970
Revision J . . . . . November, 1970

Total number of pages in this manual is 215 consisting of the following:

| Page No. | Rev. Letter |
|---|---|
| * Title | J |
| i thru x | H |
| 1-1 thru 1-8 | H |
| 2-1 thru 2-7 | H |
| 3-1 thru 3-21 | H |
| 4-1 thru 4-20 | H |
| 5-1 thru 5-44 | H |
| * 5-45 and 5-46 | J |
| 5-47 thru 5-51 | H |
| * 5-52 | J |
| 5-53 thru 5-83 | H |
| * 5-84 and 5-85 | J |
| 5-86 and 5-87 | H |
| 6-1 thru 6-18 | H |
| * 6-18A | J |
| 6-18B | H |
| 6-19 and 6-20 | H |
| * 6-21 | J |
| 6-22 and 6-23 | H |
| * 6-24 | J |
| 6-25 thru 6-45 | H |
| * 6-46 | J |
| 6-47 thru 6-59 | H |

* The asterisk indicates pages that changed in the current revision.

TABLE OF CONTENTS


| Section | Title | Page |
|---|---|---|
| 1 | INTRODUCTION | 1-1 |
| | 1.1 General | 1-1 |
| | 1.2 Functional Description | 1-1 |
| | 1.2.1 Model 210A Discriminator | 1-1 |
| | 1.2.2 Model 210B Channel Selector | 1-2 |
| | 1.2.3 Model 210C Output Filter | 1-3 |
| | 1.2.4 Model 210T Reference Channel Selector | 1-3 |
| | 1.2.5 Model 223B Power Supply | 1-4 |
| | 1.3 Physical Description | 1-5 |
| 2 | SPECIFICATIONS | 2-1 |
| | 2.1 Specifications | 2-1 |
| | 2.1.1 Electrical Specifications | 2-1 |
| | 2.1.2 Mechanical Specifications | 2-6 |
| 3 | INSTALLATION AND OPERATION | 3-1 |
| | 3.1 Installation | 3-1 |
| | 3.1.1 Unpacking | 3-1 |
| | 3.1.2 Mounting | 3-1 |
| | 3.1.3 Cooling | 3-1 |
| | 3.1.4 Electrical Connections | 3-3 |
| | 3.1.5 Power Source | 3-3 |
| | 3.2 Operation | 3-3 |
| | 3.2.1 Location and Function of Controls, Test Points and Indicators | 3-3 |
| | 3.2.2 Tape Speed Compensation | 3-17 |
| | 3.2.3 Selection of Reference Frequency | 3-19 |
| | 3.2.4 Time-Correlated Data System | 3-19 |
| 4 | THEORY OF OPERATION | 4-1 |
| | 4.1 General | 4-1 |
| | 4.2 System Operation | 4-3 |
| | 4.3 Detailed Theory | 4-3 |
| | 4.3.1 Bandpass Input Filter (BPIF) | 4-3 |
| | 4.3.2 Subcarrier Amplitude Meter | 4-4 |
| | 4.3.3 Limiter | 4-5 |
| | 4.3.4 Phase Detector-Loop Amplifier and Filter | 4-5 |
| | 4.3.5 Voltage-Controlled Oscillator (VCO) | 4-8 |
| | 4.3.6 VCO Oven Controller | 4-9 |
| | 4.3.7 Inverting Amplifier | 4-9 |
| | 4.3.8 Output Filter and Power Amplifier | 4-10 |
| | 4.3.9 Chopper Amplifier | 4-12 |

TABLE OF CONTENTS (Continued)


| Section | | Title | Page |
|---|---|---|---|
| | 4.3.10 | Percent Bandedge Meter | 4-12 |
| | 4.3.11 | Signal Loss Circuit | 4-13 |
| | 4.3.12 | Loss-of-Lock Circuit | 4-14 |
| | 4.3.13 | Delay Network | 4-14 |
| | 4.3.14 | Reference Channel Selector | 4-16 |
| | 4.3.15 | Power Supply Regulators | 4-17 |
| | 4.3.16 | Tape-Speed-Compensation System | 4-18 |
| 5 | MAINTENANCE | | 5-1 |
| | 5.1 | General | 5-1 |
| | 5.2 | Visual Inspection | 5-1 |
| | 5.3 | Circuit Performance Tests | 5-2 |
| | 5.3.1 | Test Equipment Required | 5-2 |
| | 5.3.2 | Power Supply Regulators | 5-5 |
| | 5.3.3 | Bandpass Input Filter Gain and Frequency Characteristics | 5-5 |
| | 5.3.4 | Limiter Gain and Frequency Characteristics | 5-5 |
| | 5.3.5 | Phase-Locked-Loop Detector | 5-9 |
| | 5.3.6 | Inverting Amplifier Gain and Frequency Response | 5-10 |
| | 5.3.7 | VCO Oven Controller | 5-10 |
| | 5.3.8 | Output Calibration and Linearity | 5-11 |
| | 5.3.9 | Output Filter, Power Amplifier and Chopper Amplifier | 5-11 |
| | 5.3.10 | Signal Loss Lamp | 5-13 |
| | 5.3.11 | Lock Loss Lamp | 5-13 |
| | 5.3.12 | Percent Bandedge Meter | 5-13 |
| | 5.3.13 | External Zero Offset | 5-13 |
| | 5.3.14 | External Gain | 5-13 |
| | 5.4 | Calibration Check | 5-15 |
| | 5.5 | Tape-Speed-Compensation System Check | 5-15 |
| | 5.5.1 | Adjustment of Gain (G) Control | 5-16 |
| | 5.5.2 | Adjustment of Delay (D) Control | 5-17 |
| | 5.6 | Troubleshooting | 5-17 |
| | 5.7 | Repairs | 5-22 |
| 6 | REPLACEABLE PARTS LIST | | 6-1 |
| | 6.1 | General | 6-1 |
| APPENDIX A | MODELS 210B-03 AND 210B-04 CHANNEL SELECTORS | | |

## LIST OF ILLUSTRATIONS


| Figure | | Page |
|---|---|---|
| 1-1 | Model 210 Modular Subcarrier Discriminator | x |
| 1-2 | Model 222A Rack Adapter with Modular Assemblies | 1-6 |
| 3-1 | Heat Dissipation, Model 210A Discriminator Chassis | 3-2 |
| 3-2 | External Connections, Model 210A Discriminator Chassis | 3-4 |
| 3-3 | Location of Front-Panel Controls and Indicators, Model 210A Discriminator | 3-5 |
| 3-4 | Location of Front-Panel Control, Model 210B-01, 210B-05, and 210B-06 Channel Selector | 3-7 |
| 3-5 | Location of Front-Panel Controls, Models 210B-02 and 210B-07 Channel Selectors | 3-8 |
| 3-6 | Location of Front-Panel Controls, Model 210B-11 Channel Selector | 3-9 |
| 3-7 | Location of Front-Panel Controls, Model 210B-21 Channel Selector | 3-9 |
| 3-8 | Location of Front-Panel Control, Model 210C-01 Output Filter | 3-10 |
| 3-9 | Location of Front-Panel Control, Models 210C-06 and 210C-07 Output Filters | 3-10 |
| 3-10 | Location of Front-Panel Control, Model 210C-11 Output Filter | 3-11 |
| 3-11 | Location of Front-Panel Control, Model 210C-21 Output Filter | 3-11 |
| 3-12 | Location of Front-Panel Controls, Model 210T Reference Channel Selector | 3-12 |
| 3-13 | Block Diagram, Tape-Speed-Compensation Subcarrier Discriminator System | 3-18 |
| 3-14 | Block Diagram, Time-Correlated Subcarrier Discriminator System | 3-20 |
| 4-1 | Block Diagram, Model 210 Subcarrier Discriminator | 4-2 |
| 4-2 | Idealized Waveforms, Model 210 Subcarrier Discriminator | 4-7 |
| 4-3 | Idealized Waveforms, Model 210 Subcarrier Discriminator Loss-of-Lock Circuit | 4-15 |
| 4-4 | Block Diagram, Tape-Speed-Compensation System | 4-19 |
| 5-1 | Location of Test Points and Adjustments, 210A Discriminator Chassis | 5-3 |
| 5-2 | Typical Bandpass Input Filter Response Curves (Models 210B-02, 210B-04, and 210T-01) | 5-6 |
| 5-2 | Typical Bandpass Input Filter Response Curves (Models 210B-06, 210B-07, 210B-08, and 210T-06) | 5-7 |
| 5-3 | Test Point Waveforms, 210A Discriminator Chassis | 5-8 |
| 5-4 | Theoretical Output Filter Response | 5-12 |
| 5-5 | Schematic Diagram, External Zero Offset and Gain Controls | 5-14 |
| 5-6 | Test Set-Up, Model 210T Reference Channel Selector Adjustment | 5-18 |

LIST OF ILLUSTRATIONS (Cont'd.)


| Figure | | Page |
|---|---|---|
| 5-7 | Model 210 Subcarrier Discriminator Assembly | 5-25 |
| 5-8 | Model 210 Subcarrier Discriminator Schematic Diagram | 5-26 |
| 5-9 | Component Locations, Model 210A Front-Panel Assembly | 5-27 |
| 5-10 | Component Locations, Main Printed-Circuit-Card Assembly | 5-28 |
| 5-11 | Schematic Diagram, Main Printed-Circuit-Card Assembly | 5-29 |
| 5-12 | Oven Assembly | 5-30 |
| 5-13 | Component Locations, Oven Printed-Circuit-Card Assembly | 5-31 |
| 5-14 | Schematic Diagram, Oven Assembly | 5-32 |
| 5-15 | Component Locations, Inverting Amplifier Printed-Circuit-Card Assembly | 5-33 |
| 5-16 | Schematic Diagram, Inverting Amplifier Printed-Circuit-Card Assembly | 5-34 |
| 5-17 | Component Locations, Secondary Printed-Circuit-Card Assembly | 5-35 |
| 5-18 | Schematic Diagram, Secondary Printed-Circuit-Card Assembly | 5-36 |
| 5-19 | Model 210B Channel Selector Assembly | 5-37 |
| 5-20 | Component Locations, Models 210B-01 and 210B-05 Printed-Circuit-Card Assembly (Below 2.3 Kc) | 5-38 |
| 5-21 | Component Locations, Model 210B-01 Printed-Circuit-Card Assembly (2.3 Kc and above) | 5-39 |
| 5-22 | Schematic Diagram, Model 210B-01 Channel Selector Assembly | 5-40 |
| 5-23 | Schematic Diagram, Model 210B-05 Channel Selector Assembly | 5-41 |
| 5-24 | Component Locations, Model 210B-02 Printed-Circuit-Card Assembly (Below 2.3 Kc) | 5-42 |
| 5-25 | Component Locations, Model 210B-02 Printed-Circuit-Card Assembly (2.3 Kc and above) | 5-43 |
| 5-26 | Schematic Diagram, Model 210B-02 Channel Selector Assembly | 5-44 |
| 5-27 | Component Locations, Model 210B-06 Channel Selector Main Printed-Circuit-Card Assembly | 5-45 |
| 5-28 | Schematic Diagram, Model 210B-06 Channel Selector Assembly | 5-46 |
| 5-29 | Component Locations, Follower No. 1 Printed-Wiring-Module Assembly (Used on Models 210B-06 and 210B-07) | 5-47 |
| 5-30 | Schematic Diagram, Follower No. 1 Printed-Wiring-Module Assembly (Used on Models 210B-06 and 210B-07) | 5-48 |
| 5-31 | Component Locations, Follower No. 2 Printed-Wiring-Module Assembly (Used on Models 210B-06, 210B-07, 210T-06, 210T-07, and 210T-08) | 5-49 |

LIST OF ILLUSTRATIONS (Cont'd.)


| Figure | | Page |
|---|---|---|
| 5-32 | Schematic Diagram, Follower No. 2 Printed-Wiring-Module Assembly (Used on Models 210B-06, 210B-07, 210T-06, 210T-07, and 210T-08) | 5-50 |
| 5-33 | Component Locations, Model 210B-07 Channel Selector Printed-Circuit-Card Assembly | 5-51 |
| 5-34 | Schematic Diagram, Model 210B-07 Channel Selector Printed-Wiring-Board Assembly | 5-52 |
| 5-35 | Component Locations, Model 210B-11 Channel Selector Printed-Wiring-Board Assembly | 5-53 |
| 5-36 | Schematic Diagram, Model 210B-11 Channel Selector Printed-Wiring-Board Assembly | 5-54 |
| 5-37 | Component Locations, Model 210B-21 Dual-Deviation Band-Pass Input Filter (BPIF) Printed-Wiring-Board Assembly | 5-55 |
| 5-38 | Schematic Diagram, Model 210B-21 Dual-Deviation Band-Pass Input Filter (BPIF) Printed-Wiring-Board Assembly | 5-56 |
| 5-39 | Model 210C Output Filter Assembly | 5-57 |
| 5-40 | Component Locations, Models 210C-01, 210C-02, and 210C-03 Printed-Circuit-Card Assemblies | 5-58 |
| 5-41 | Schematic Diagram, Model 210C-01 Output Filter Assembly | 5-59 |
| 5-42 | Schematic Diagram, Model 210C-02 Output Filter Assembly | 5-60 |
| 5-43 | Schematic Diagram, Model 210C-03 Output Filter Assembly | 5-61 |
| 5-44 | Component Locations, Models 210C-04 and 210C-05 Printed-Circuit-Card Assemblies | 5-62 |
| 5-45 | Schematic Diagram, Models 210C-04 and 210C-05 Output Filter Assemblies | 5-63 |
| 5-46 | Component Locations, Model 210C-06 Printed-Circuit-Card Assembly | 5-64 |
| 5-47 | Schematic Diagram, Model 210C-06 Output Filter Assembly | 5-65 |
| 5-48 | Component Locations, Model 210C-07 Printed-Circuit-Card Assembly | 5-66 |
| 5-49 | Schematic Diagram, Model 210C-07 Output Filter Assembly | 5-67 |
| 5-50 | Component Locations, Model 210C-08 Low-Pass Output Filter, Printed-Circuit-Card Assembly | 5-68 |
| 5-51 | Schematic Diagram, Model 210C-08 Low-Pass Output Filter Assembly | 5-69 |
| 5-52 | Component Locations, Model 210C-09 Output Filter Printed-Circuit-Card Assembly | 5-70 |
| 5-53 | Schematic Diagram, Model 210C-09 Output Filter Assembly | 5-71 |
| 5-54 | Component Locations, Model 210C-11 Switchable Low-Pass Output Filter Printed-Wiring-Card Assembly | 5-72 |
| 5-55 | Schematic Diagram, Model 210C-11 Switchable Low-Pass Output Filter Printed-Wiring-Card Assembly | 5-73 |
| 5-56 | Component Locations, Model 210C-21 Dual Output Filter Printed-Wiring-Card Assembly | 5-74 |

LIST OF ILLUSTRATIONS (Cont'd.)


| Figure | | Page |
|---|---|---|
| 5-57 | Schematic Diagram, Model 210C-21 Dual Output Filter Printed-Wiring Card Assembly | 5-75 |
| 5-58 | Model 210T Reference Channel Selector Assembly | 5-76 |
| 5-59 | Component Locations, Model 210T-01 and 210T-02 Channel Selector Printed-Circuit Card Assemblies | 5-77 |
| 5-60 | Component Locations, Models 210T-06, 210T-07, and 210T-08 Channel Selector Printed-Wiring Card Assemblies | 5-78 |
| 5-61 | Component Locations, Models 210T-01, 210T-03, 210T-06, and 210T-08 Output Filter Printed-Circuit Card Assembly | 5-79 |
| 5-62 | Component Locations, Model 210T-02 and 210T-07 Output Filter Printed-Circuit Card Assemblies | 5-79 |
| 5-63 | Schematic Diagram, Models 210T-01 and 210T-03 Reference Channel Selector Assemblies | 5-80 |
| 5-64 | Schematic Diagram, Model 210T-02 Reference Channel Selector Assembly | 5-81 |
| 5-65 | Schematic Diagram, Model 210T-06 and 210T-08 Reference Channel Selector Assemblies | 5-82 |
| 5-66 | Schematic Diagram, Model 210T-07 Reference Channel Selector Assembly | 5-83 |
| 5-67 | Assembly Diagram, Models 210B-01 and 210B-02 BPIF 5FL101 (Part Nos. 10854 or 10854-1) | 5-84 |
| 5-68 | Schematic Diagram, Models 210B-01 and 210B-02 BPIF 5FL101 (Part Nos. 10854 or 10854-1) | 5-85 |
| 5-69 | Assembly Diagram, Models 210B-01 and 210B-02 BPIF 5FL101 (Part Nos. 10847 or 10847-1) | 5-86 |
| 5-70 | Schematic Diagram, Models 210B-01 and 210B-02 BPIF 5FL101 (Part Nos. 10847 or 10847-1) | 5-87 |
| A-1 | Models 210B-03, 210B-04, and 210B-08 Channel Selectors | A-7 |
| A-2 | Models 210B-03, 210B-04, and 210B-08 Channel Selectors Block Diagram | A-8 |
| A-3 | Models 210B-03 and 210B-04 Channel Selectors, Idealized Waveforms | A-9 |
| A-4 | Component Locations, Model 210B-03 Channel Selector Printed-Circuit Card | A-10 |
| A-5 | Schematic Diagram, Model 210B-03 Channel Selector | A-11 |
| A-6 | Component Locations, Model 210B-04 Channel Selector Printed-Circuit Card | A-12 |
| A-7 | Schematic Diagram, Model 210B-04 Channel Selector | A-13 |
| A-8 | Component Locations, Model 210B-08 Main Printed-Circuit Card Assembly | A-14 |
| A-9 | Schematic Diagram, Model 210B-08 Channel Selector Assembly | A-15 |
| A-10 | Component Locations, Dual Follower Assembly | A-16 |
| A-11 | Schematic Diagram, Dual Follower Printed-Wiring Module Assembly | A-17 |

LIST OF TABLES


| Table | | Page |
|---|---|---|
| 1-1 | Design Sequence Variations | 1-7 |
| 2-1 | IRIG-Standard Channels and Cutoff Frequencies | 2-7 |
| 3-1 | Function of Front-Panel Controls and Indicators, Model 210A Discriminator | 3-6 |
| 3-2 | Function of Front-Panel Control, Model 210B-01 Channel Selector | 3-13 |
| 3-3 | Function of Front-Panel Controls, Model 210B-02 Channel Selector | 3-13 |
| 3-4 | Function of Front-Panel Controls, Model 210B-11 Channel Selector | 3-13 |
| 3-5 | Function of Front-Panel Controls, Model 210B-21 Output Filter | 3-14 |
| 3-6 | Function of Front-Panel Control, Model 210C-01 Output Filter | 3-14 |
| 3-7 | Function of Front-Panel Control, Model 210C-06 and 210C-07 Output Filters | 3-14 |
| 3-8 | Function of Front-Panel Control, Model 210C-11 Output Filter | 3-15 |
| 3-9 | Function of Front-Panel Control, Model 210C-21 Output Filter | 3-15 |
| 3-10 | Function of Front-Panel Controls, Model 210T Reference Channel Selector | 3-16 |
| 5-1 | Function of Test Points and Adjustments, 210A Discriminator Chassis | 5-4 |
| 5-2 | Transistor Voltages | 5-19 |
| 6-1 | Model 210 Subcarrier Discriminator Assembly | 6-3 |
| 6-2 | Model 210A Front-Panel Assembly | 6-4 |
| 6-3 | Model 210A Main Card Assembly | 6-5 |
| 6-4 | Model 210A Oven Assembly | 6-9 |
| 6-5 | Model 210A Inverting Amplifier Card Assembly | 6-10 |
| 6-6 | Model 210A Secondary Card Assembly | 6-11 |
| 6-7 | Model 210B Channel Selector Assemblies | 6-15 |
| 6-8 | Model 210B-01 and 210B-05 Printed-Circuit Card Assemblies | 6-17 |
| 6-8A | Less Than Five-Percent Deviation BPIF Printed-Wiring Assembly for Models 210B-01 or 210B-02 | 6-18A |
| 6-8B | Five-Percent, or Greater, Deviation BPIF Printed-Wiring Assembly for Models 210B-01 or 210B-02 | 6-18B |
| 6-9 | Model 210B-02 Printed-Circuit Card Assembly | 6-19 |
| 6-10 | Model 210B-06 Printed-Circuit Card Assembly | 6-21 |
| 6-11 | Follower No. 1 Printed-Wiring Module | 6-22 |
| 6-12 | Follower No. 2 Printed-Wiring Module Assembly | 6-23 |
| 6-13 | Model 210B-07 Printed-Circuit Card Assembly | 6-24 |
| 6-14 | Model 210B-11 Channel Selector Printed-Circuit Card Assembly | 6-26 |
| 6-15 | Model 210B-21 Dual-Deviation BPIF Printed-Circuit Card Assembly | 6-29 |
| 6-16 | Model 210C Output Filter Assemblies | 6-30 |

LIST OF TABLES (Cont'd.)


| Table | | Page |
|---|---|---|
| 6-17 | Models 210C-01, 210C-02, and 210C-03 Printed-Circuit-Card Assemblies | 6-32 |
| 6-18 | Models 210C-04 and 210C-05 Printed-Circuit-Card Assemblies | 6-33 |
| 6-19 | Model 210C-06 Printed-Circuit-Card Assembly | 6-34 |
| 6-20 | Model 210C-07 Printed-Circuit-Card Assembly | 6-35 |
| 6-21 | Model 210C-08 Printed-Circuit-Card Assembly | 6-36 |
| 6-22 | Model 210B-09 Printed-Circuit-Card Assembly | 6-37 |
| 6-23 | Model 210C-11 Printed-Circuit-Card Assembly | 6-38 |
| 6-24 | Model 210C-21 Printed-Wiring-Board Assembly | 6-39 |
| 6-25 | Model 210T Reference Channel Selector Assembly | 6-40 |
| 6-26 | Models 210T-01, 210T-02, and 210T-03 Channel Selector Printed-Circuit-Card Assembly | 6-41 |
| 6-27 | Models 210T-06, 210T-07, and 210T-08 Channel Selector Printed-Circuit-Card Assembly | 6-42 |
| 6-28 | Models 210T-01, 210T-03, 210T-06, and 210T-08 Output Filters Printed-Circuit-Card Assembly | 6-43 |
| 6-29 | Models 210T-02 and 210T-07 Output Filters Printed-Circuit-Card Assembly | 6-44 |
| 6-30 | Component Value Formulas, Models 210B-01, 210B-02, 210B-05, 210B-06, and 210B-07 Channel Selectors | 6-45 |
| 6-31 | Component Types, Models 210B-01, 210B-02, 210B-05, and 210B-06 Channel Selectors | 6-47 |
| 6-32 | Component Value Formulas and Types, Model 210B-21 Channel Selector Assembly | 6-48 |
| 6-33 | Component Value Formulas, Models 210C-01, 210C-02, and 210C-03 Output Filters | 6-49 |
| 6-34 | Component Types, Models 210C-01, 210C-02, and 210C-03 Output Filters | 6-50 |
| 6-35 | Component Value Formulas, Model 210C-07 Output Filter | 6-51 |
| 6-36 | Component Types, Model 210C-07 Output Filter | 6-52 |
| 6-37 | Component Values and Types, Model 210C-08 Output Filter Assembly | 5-53 |
| 6-38 | Component Values and Types, Model 210C-09 Output Filter Assembly | 5-53 |
| 6-39 | Component Values and Types, Model 210C-21 Output Filter Assembly | 6-54 |
| 6-40 | Component Value Formulas, Models 210T-01 and 210T-06 Reference Channel Selectors | 6-55 |
| 6-41 | Component Types, Models 210T-01 and 210T-06 Reference Channel Selectors | 6-56 |
| 6-42 | Component Value Formulas, Models 210T-02 and 210T-07 Reference Channel Selectors | 6-57 |
| 6-43 | Component Types, Model 210T-03 and 210T-07 Reference Channel Selectors | 6-58 |

LIST OF TABLES (Cont'd.)


| Table | | Page |
|---|---|---|
| 6-44 | Component Value Formulas and Types, Models 210T-03 and 210T-08 Reference Channel Selectors | 6-59 |
| 6-45 | Approved Vendors List | 6-60 |
| A-1 | Models 210B-03, 210B-04, and 210B-08 Channel Selectors List of Transistor Voltages | A-18 |
| A-2 | Parts List, Models 210B-03, 210B-04, and 210B-08 Channel Selector Assemblies | A-19 |
| A-3 | Parts List, Models 210B-03 and 210B-04 Channel Selector Printed-Circuit-Card Assembly | A-20 |
| A-4 | Parts List, Model 210B-08 Channel Selector Printed-Circuit-Card Assembly | A-23 |
| A-5 | Component Values and Types, Model 210B-03 Channel Selector | A-25 |
| A-6 | Component Values and Types, Models 210B-04 and 210B-08 Channel Selectors | A-26 |

Figure 1-1. Model 210 Modular Subcarrier Discriminator

# SECTION 1

# INTRODUCTION

## 1.1 GENERAL

This manual contains information covering installation, operation and maintenance of the Model 210 Subcarrier Discriminator. The discriminator is a precision instrument of solid-state design for use in FM telemetry and data-processing systems. The system input signal (from an FM receiver or magnetic-tape reproduction system) is either a single FM subcarrier or a composite signal (multiplex) containing several subcarriers. One subcarrier channel of the multiplex is assigned to each discriminator in the system. Each discriminator provides three functions in the processing system:

a. Selection of the assigned subcarrier channel from the multiplex.

b. Detection of the selected FM signal or conversion of frequency to a voltage representative of the telemetered data. Phase-locked-loop FM detection is employed, providing improved performance under adverse signal-to-noise conditions compared to other means of FM detection.

c. Filtering and amplification of the detected signal to provide a data output signal suitable for further processing equipments such as recording galvanometers, decommutators, analog-to-digital converters and computers.

A plug-in channel selector (Model 210B series) is used in each discriminator to select only the assigned channel from the multiplexed input signal. The channel selector also contains the tuning components of the phase-locked-loop FM detector. A plug-in output filter (Model 210C series) determines the data output signal response as applicable for the assigned channel and further processing equipment.

## 1.2 FUNCTIONAL DESCRIPTION

### 1.2.1 Model 210A Discriminator

The Model 210A Discriminator employs a phase-locked-loop FM detector and provides improved signal-to-noise performance under adverse signal-to-noise conditions compared to other means of FM detection. A detailed description of the operation of the phase-locked-loop FM detector is given in Section 4, Theory of Operation

Stability of the Model 210 is assured through the use of planar silicon devices and specialized circuitry wherever temperature and random drifts are likely to be encountered. The phase-locked-loop voltage-controlled oscillator, which is the heart of the detection process, is operated in an oven which is temperature-controlled by a continuous-control thermostat-servo of non-mechanical solid-state design. The output filter-amplifier is stabilized by means of a solid-state chopper.

Precision power-supply regulators are provided in each discriminator for all critical circuitry. The regulators are compensated against the effects of line-voltage variations and temperature changes. In addition, the regulators eliminate interchannel crosstalk which may otherwise be caused by common power supply impedance. The regulators provide current limiting to prevent a short circuit in the circuitry of one discriminator from affecting other units in the same rack adapter.

The discriminator is constructed on two basic printed-circuit cards, thus eliminating cabling and hand wiring except for panel connections. Test points and adjustments are grouped together and immediately accessible at the top of the unit with the equipment energized.

Components used are completely interchangeable without readjustment of the discriminator by means other than the adjustment potentiometers accessible at the top of the unit. Each discriminator is equipped with front-panel neon lamps to indicate loss of subcarrier input signal and loss-of-lock of the phase-locked loop FM detector. Upon loss of subcarrier signal, the discriminator data output is grounded to protect recording galvanometers; the input level for clamping is adjustable by means of a potentiometer at the top of the unit.

The amplitude of the individual subcarrier input can be anywhere within the 60 Db range of 10 millivolts to 10 volts without adjustment. This wide dynamic range essentially eliminates effects of amplitude modulation or tape dropout.

The 210A is supplied in any of four versions (210A-01, 210A-02, 210A-04, 210A-05). Differences between these models are described in Table 1-1, Page 1-8.

### 1.2.2 Model 210B Channel Selector

A Model 210B Channel Selector is used in each Model 210A Discriminator to select an assigned channel from the multiplex. The channel selector contains a bandpass input filter of special design in which input impedance increases rapidly at frequencies out of the passband. This enables a standard tape recorder or receiver to drive a complete subcarrier discriminator system. An active element is not used at the multiplex input to the discriminator; thus, additional noise is not introduced into the data discriminator at low signal levels,and very large peak-signal capability is provided to virtually eliminate crosstalk due to circuit non-linearities.

The channel selector also contains the tuning components of the phase-locked-loop FM detector. Where exceptional signal-to-noise performance is required, the Model 210B-02 or 210B-07 Channel Selector can be used for taking optimum advantage of the phase-locked-loop principle of FM detection. This unit has a six-position phase-locked-loop bandwidth switch for selecting deviation ratios of 1, 5, 10, 25, 50 or 100.

A precision delay network is a part of each channel selector and is adjusted to match the bandpass input filter delay. Thus, external networks or individual channel delay and amplitude adjustments are unnecessary.

The Model 210B Channel Selector is supplied in seven standard versions (Models 210B-01, 210B-02, 210B-05, 210B-06, 210B-07, 210B-11, and 210B-21). These models are identical with the exceptions noted in Table 1-1 (page 1-8), Design Sequence Variations. Three additional models of the 210B Channel Selector (210B-03, 210B-04, and 210B-08) are available. Complete instructions for these models are supplied in Appendix A of this manual.

### 1.2.3 Model 210C Output Filter

The Model 210C Output Filter is used in each Model 210A which functions as a data discriminator. The output filter determines the data output response of the discriminator. The Model 210C-01 has a front-panel switch to permit operation as either a constant-amplitude (maximally flat amplitude response) or constant-delay (maximally flat envelope delay) filter. This allows the operator to select the proper filter characteristic for either analog or pulse type data. The Models 210C-04 and 210C-05 Output Filters are available providing increased attenuation at frequencies higher than cutoff for applications where serious crosstalk problems are expected; the Models 210C-06 and 210C-07 Output Filters are available to provide time-correlated data outputs.

The channel selector and output filter slide into the discriminator chassis and are part of the discriminator when it is removed from the rack adapter. However, both the channel selector and output filter can be removed as an integral unit by lifting a handle which is part of the output filter front panel. A spring-loaded release button unlocks the output filter from the channel selector.

The 210C is supplied in any of eleven versions (Models 210C-01, 210C-02, 210C-03, 210C-04, 210C-05, 210C-06, 210C-07, 210C-08, 210C-09, 210C-11, and 210C-21). These models are similar with the exceptions noted in Table 1-1 (page 1-8), Design Sequence Variations.

### 1.2.4 Model 210T Reference Channel Selector

The Model 210T Reference Channel Selector includes a channel selector and an output filter in a single chassis. The channel selector portion is identical to the Model 210B and the output filter portion is identical to the Model 210C with the following exceptions:

a. Delay network is removed.

b. Units are permanently connected.

c. Front panel gain (G), delay (D), and TSC ON-OFF controls are included on reference channel selector.

d. Output filter frequency determining components are not independently variable.

The bandpass input filter is tuned to pass only the reference frequency contained in the FM multiplex.

The Model 210T Reference Channel Selector is used in conjunction with a Model 210A Discriminator to form a reference discriminator. The reference discriminator receives a reference frequency from the pre-recorded FM multiplex. Modulation of the reference frequency introduced by tape speed variations is detected by the reference discriminator which produces an error signal output. This error signal is then introduced to the data discriminators in the form of a tape-speed-compensation error signal.

The Model 210T Reference Channel Selector is available in six versions (Models 210T-01, 210T-02, 210T-03, 210T-06, 210T-07, and 210T-08). The Model 210T-01 or 210T-06 are used in conjunction with the Model 230 Signal Delay Unit in standard tape-speed-compensation systems. The Model 210T-02 or 210T-07 are designed specifically for use with the Model 258 Detranslator in a detranslating tape-speed-compensation system. The Model 210T-03 and 210T-08 are designed for use in constant-bandwidth systems in which a Model 259A Group Frequency Detranslator is used.

### 1.2.5 Model 223B Power Supply

The Model 223B Power Supply is the regulated DC power source for the Model 210 Discriminators. The output voltages of the power supply are as follows:

a. Unregulated Output Voltages

-26 volts ±1 volt at 0.25 ampere
-105 volts ±5 volts at 0.02 ampere

b. Regulated Output Voltages

+17.5 volts ±0.87 volt at 1.5 amperes
-17.5 volts ±0.87 volt at 1.5 amperes

For further information and instructions for the power supply, refer to the Model 223B Power Supply Instruction Manual.

## 1.3 PHYSICAL DESCRIPTION

A typical FM data decoding module is illustrated in Figure 1-2. This module consists of one Model 222A Rack Adapter, one Model 223B Power Supply and six Model 210A Data Discriminators complete with Model 210B Channel Selectors and Model 210C Output Filters. The Model 222A Rack Adapter occupies 5-1/4 inches of panel height in a standard 19-inch rack and the overall depth behind the panel is 18-3/8 inches including terminal connections. Units totaling 21 modular widths (each modular width is 13/16 inch) can be mounted in each Model 222A Rack Adapter. The modular units are positioned and guided in the rack adapter by anodized aluminum T rails. Each Model 210 Discriminator occupies three modular widths in the Model 222A Rack Adapter. For a complete description of the rack adapter, refer to the Model 222A Rack Adapter Instruction Manual.

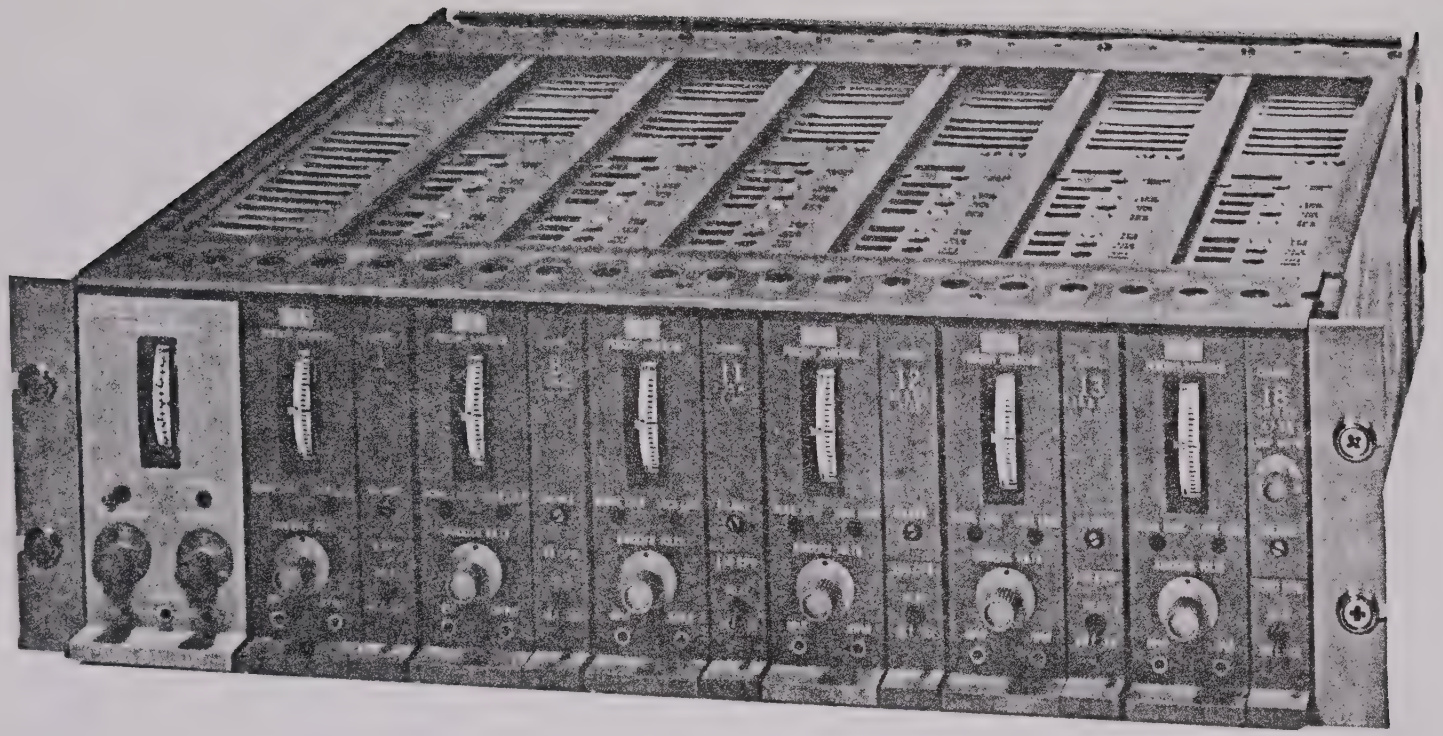

Figure 1-2. Model 222A Rack Adapter with Modular Assemblies

Table 1-1. Design Sequence Variations

| Model | Model Variation Description |
|---|---|
| 210A-01 | Standard model with negative deviation polarity. |
| 210A-02 | Same as 210A-01 except for the addition of a nine-turn counter dial for bandedge volts control. |
| 210A-04 | Switchable deviation polarity. |
| 210A-05 | Same as 210A-04 except for the addition of nine-turn counter dial for bandedge volts control. |
| 210 B-01 | Subcarrier center frequencies from 300 CPS to 300 Kc at deviations from ±2.5% to ±18%. |
| 210B-02 | Additional loop width switch for selecting deviation ratio of 1, 5, 10, 25, 50 or 100. |
| 210B-03 | Refer to Appendix A of this manual. |
| 210B-04 | Refer to Appendix A of this manual. |
| 210B-08 | Refer to Appendix A of this manual. |
| 210B-05 | Designed for low frequency applications (below 300 CPS) BPIF located external to the 210B module. |
| 210B-06 | Identical to the Model 210B-01 except for filter input and output circuits refinement. |
| 210B-07 | Identical to the Model 210B-02 except for filter input and output circuits refinement. |
| 210B-11 | Wideband FM channel selector. Contains switch for selection of 108, 54, 27, 13.5, 6.75, or 3.375 Kc. |
| 210B-21 | Switchable-bandwidth channel selector. Available for channels 14 and A, 15 and B, etc., through 21 and H. (Refer to Table 2-1). |
| 210C-01 | Three-pole filter with switch for selecting constant-amplitude or constant-delay characteristic. Cut-off frequencies from 1 CPS to 45 Kc. |
| 210C-02 | Three-pole filter with constant-amplitude characteristic. Cut-off frequencies from 1 CPS to 45 Kc. |

Table 1-1 (Cont'd.). Design Sequence Variations

| Model | Model Variation Description |
|---|---|
| 210C-03 | Three-pole filter with constant-delay characteristic. Cut-off frequencies from 1 CPS to 45 Kc. |
| 210C-04 | Seven-pole filter with constant-amplitude characteristic. Cut-off frequencies from 220 CPS to 45 Kc. |
| 210C-05 | Seven-pole filter with constant delay characteristic. Cut-off frequencies from 220 CPS to 45 Kc. |
| 210C-06 | For time-correlated proportional-bandwidth systems (18-Db/octave rolloff). |
| 210C-07 | For time-correlated constant-bandwidth systems (18 Db/octave rolloff). |
| 210C-08 | Constant delay filter with a characteristic essentially that of the sixth-order maximally flat envelope delay (Bessel) response. |
| 210C-09 | Constant-amplitude filter with a characteristic essentially that of the fifth order maximally flat amplitude (Butterworth) response. |
| 210C-11 | For use with Model 210B-11 Wideband FM Channel Selector. Six switch-selectable cutoff frequencies (20, 10, 5, 2.5, 1.25, and 0.625 kc) are supplied. |
| 210C-21 | For use with Model 210B-21 Switchable-Bandwidth Channel Selector. Cutoff frequency narrowband or wide-band and response constant-amplitude or constant-delay characteristics are switch selectable. |
| 210T-01 and *210T-06 | Standard for proportional bandwidth systems. |
| 210T-02 and *210T-07 | Standard for constant-bandwidth systems in which a Model 258 Frequency Detranslator is used. |
| 210T-03 and *210T-08 | Standard for constant-bandwidth systems in which a Model 259A Group Frequency Detranslator is used. |

* The Models 210T-06, 210T-07 and 210T-08 are identical to the 210T-01, 210T-02 and 210T-03 respectively except for the input and output emitter-follower circuits for the notched Bandpass Input Filter.

## SECTION 2

## SPECIFICATIONS

### 2.1 SPECIFICATIONS

The discriminator is operable over the frequency ranges and deviation ratios as stated in Paragraph 2.1.1. The channel selector and the output filter establish subcarrier center frequency, deviation, loop characteristics and intelligence bandwidth. These specifications are based on IRIG-specified frequencies and deviation ratios (See Table 2-1). Where performance outside IRIG channels is required, some of these specifications may not apply in full.

#### 2.1.1 Electrical Specifications

a. Subcarrier Frequencies:

1. Model 210B-01 through 210B-08 Channel Selectors: IRIG center frequencies are standard (see Table 2-1). Other center frequencies between 300 CPS and 300 Kc can be supplied on special order.

2. Model 210B-11 Wideband FM Channel Selector: Contains switch for selection of 108, 54, 27, 13.5, 6.75, or 3.375 Kc.

3. Model 210B-21 Switchable-Bandwidth Channel Selector: Available for channels 14 and A, 15 and B, etc., through 21 and H.

b. Subcarrier Frequency Deviations: Deviations between ±2.5% and ±18% are available when a Model 210B-01, 210B-02, 210B-06 or 210B-07 Channel Selector is used. Deviations between ±18% and ±45% at deviation ratios as low as 1 can be accommodated by using a Model 210B-03 or 210B-08 Channel Selector, which is available for subcarrier frequencies between 3 Kc and 300 Kc. Because it does not contain a band-pass input filter, the Model 210B-03 Channel Selector is designed primarily for use in single-channel FM recording such as is described in Paragraph 6.6 of IRIG Telemetry Standard 106-60. The Model 210B-03 may be used in an FM multiplex system if an external Band-pass Input Filter is used. The Model 210B-08 contains a constant-delay input filter and can be used for wideband FM subcarriers in a multiplex.

The Model 210B-05 is designed for low frequency application with the Band-Pass Input Filter located external to the 210B module. It's characteristic is identical to the Model 210B-01.

The Model 210B-04 is designed for wideband applications similar to the 210B-03 in characteristics. It houses a Band-Pass Input Filter and can, therefore, be used in a multiplex system.

The deviation of the Model 210B-11 Wideband FM Channel Selector is ±40%; its application is identical to that of the Model 210B-03. The deviation of the Model 210B-21 Switchable-Bandwidth Channel Selector is ±7.5% or ±15% depending upon the channel selected.

c. Deviation Ratio: The phase-locked-loop bandwidth of the Model 210B-01 and 210B-06 Channel Selector is fixed and sufficiently wide that the phase-locked loop does not lose lock with a bandedge-to-bandedge step of subcarrier frequency. The Models 210B-02 and 210B-07 Channel Selectors have a Loop Width switch for selecting a deviation ratio of 1, 5, 10, 25, 50, or 100. When a deviation ratio of 1 is selected, the phase-locked loop does not lose lock with a bandedge-to-bandedge step of subcarrier frequency. Any deviation ratio between 1 and 1000 can be obtained with an RC network which easily can be added in the field. RC-network design is included in the instruction manual for customer application, or the network can be supplied on special order.

d. Data Frequencies: Frequencies between 1 CPS and 45 Kc are available except where an output filter (e.g., 210C-11 and 210C-21) has been specifically designed for certain applications.

e. Input Impedance: 100,000-ohm resistance shunted by less than 50-Pf capacitance.

f. Dynamic Input-Signal Range: Models 210B-03 through 210B-08 and 210B-11, 10 Mv to 10V peak (60 Db); Model 210B-21, 15 Mv to 10V peak (56 Db).

g. Amplitude-Modulation Rejection: With a deviation ratio of 5, a 20-Db step of input amplitude anywhere in the 60-Db (56 Db for Model 210B-21) dynamic input range causes a peak transient of less than 1.0% of bandwidth.

h. Subcarrier Amplitude Meter: A meter on the Model 223B Power Supply measures the amplitude of the subcarrier signal at the output of the discriminator band-pass input filter; this amplitude is referenced to the center-frequency amplitude of the subcarrier at the input to the discriminator. The meter has five ranges: 0.1, 0.3, 1.0, 3.0, and 10.0 volts; its indication is accurate to ±5% of full scale. One input meter is used for up to six discriminators.

i. Rejection of Unwanted Signals: Crosstalk due to nearest-bandedge deviation of an adjacent ±7.5% deviation IRIG channel is attenuated 60 Db in the extreme case where the interfering subcarrier has an amplitude 37 Db greater than that of the desired subcarrier and where the desired subcarrier is anywhere within the band.

j. Tape-Speed-Compensation System: The EMR tape-speed-compensation system used with the Model 210 Discriminator has a guaranteed wow-and-flutter improvement ratio of 30 Db for tape-speed variations as high as ±3%, up to the cutoff frequency of the channel and for sub-carrier signals anywhere in the pass band. The Model 210B Channel Selector contains the necessary delay network. A Model 210T Reference Channel Selector is used in the reference discriminator.

k. Linearity: The best-straight-line linearity is ±0.05% of bandwidth.

l. Output Noise: The rms value is less than 0.05% of the full-bandwidth voltage at any setting of the Bandedge Volts control.

m. Output-Zero Stability: ±0.15% of bandwidth in a 15-hour period after a 15-minute warm-up.

n. Deviation-Sensitivity Stability: ±0.15% in a 15-hour period after a 15-minute warm-up.

o. Output Voltage and Current: The output voltage is single-ended and referenced to ground. The deviation polarity is negative only or switchable to provide negative or positive. The nine-turn bandedge volts control continuously varies bandedge output voltage from 1.0V to 10V; a calibrated dial-turns counter for adjustment of output voltage within ±5% is available. The output-current capability is 100 Ma.

p. Output Impedance: 1.0 ohm or less at 10-volt bandedge output, decreasing linearly to 0.1 ohm or less at 1.0 volt bandedge output.

q. Output Load: The value of the RC load connected in parallel from the output terminal of the discriminator to ground should be limited such that the total current does not exceed 100 Ma. The maximum allowable capacitance is 0.01 microfarad; the discriminator can not be damaged in any way by a short circuit on the output terminal. Provided that the output current capability is not exceeded, the discriminator will operate satisfactorily with a load capacitance of any value connected in series with a resistance of 15 ohms or more.

r. Harmonic Distortion: For deviation ratios of 5 or greater, the harmonic distortion for bandedge-to-bandedge modulation does not exceed 0.5% for any modulation frequency up to the cutoff frequency of the channel.

s. Discriminator Data Response: The standard output filter for the Model 210 Discriminator is the Model 210C-01, which is described below together with other available models.

Model 210C-01 -- Contains a front-panel delay-amplitude switch for selecting either constant-delay or constant-amplitude response. The constant-delay characteristic is desirable for pulse-modulation data systems; the constant-amplitude characteristic is used for maximum data-frequency response. Both responses have an asymptotic slope of 18 Db per octave. With the Model 210B-06 Channel Selector and a deviation ratio of 5 of more, the characteristics are as follows:

1. In the "Delay" switch position the output filter characteristic is essentially that of the third-order maximally flat envelope delay (Bessel) response. The data response of the discriminator is down 3 Db at the cutoff frequency, 10 Db at two times the cutoff frequency, and 25 Db at four times the cutoff frequency.

2. In the "Amplitude" switch position the output-filter characteristic is essentially that of the third-order maximally flat amplitude (Butterworth) response. The data response of the discriminator is down 0.5 Db at the cutoff frequency, 8 Db at two times the cutoff frequency, and 25 Db at four times the cutoff frequency.

For applications not requiring the flexibility of the Delay-Amplitude switch, two output filters are available:

Model 210C-02 -- A constant-amplitude filter with characteristics identical to those of the Model 210C-01 when its switch is in the "Amplitude" position.

Model 210C-03 -- A constant-delay filter with characteristics identical to those of the Model 210C-01 when its switch is in the "Delay" position.

For applications where serious signal-to-noise problems, such as cross-talk, are expected, output filters having an asymptotic slope beyond cutoff of 42 Db per octave are available for cutoff frequencies between 220 CPS and 45 Kc. They are recommended for use with the Model 210B-03 and 210B-08 Channel Selectors at deviation ratios of less than 3:

Model 210C-04 -- A constant-amplitude filter with a characteristic essentially that of the seventh-order maximally flat amplitude (Butterworth) response. The data response of the discriminator is down 0.5 Db at the cutoff frequency, 30 Db at two times the cutoff frequency, and 50 Db at three times the cutoff frequency.

Model 210C-05 -- A constant-delay filter with a characteristic essentially that of the seventh-order maximally flat envelope delay (Bessel) response. The data response of the discriminator is down 3 Db at the cutoff frequency, 11 Db at two times the cutoff frequency, and 45 Db at four times the cutoff frequency.

For applications where steep rolloff at frequencies below 220 CPS is desired - for example, where the channel deviation ratio is as low as 2 -- two output filters are available:

Model 210C-08 -- A constant-delay filter with a characteristic essentially that of the sixth-order maximally flat envelope delay (Bessel) response. The data response of the discriminator is down 3 Db at the cutoff frequency, 14 Db at two times the cutoff frequency, and 30 Db at three times the cutoff frequency. The asymptotic slope is 36 Db per octave.

Model 210C-09 -- A constant-amplitude filter with a characteristic essentially that of the fifth-order maximally flat amplitude (Butterworth) response. The data response of the discriminator is down 0.5 Db at the cutoff frequency, 18 Db at two times the cutoff frequency, and 40 Db at three times the cutoff frequency. The asymptotic slope is 30 Db per octave.

Other special output filters available are:

Model 210C-11 -- Designed for use with the Model 210B-11 Wideband FM Channel Selector. Contains a front-panel switch for selection of one of six cutoff frequencies: 20, 10, 5, 2.5, 1.25, or 0.625 Kc. It is a constant-delay filter with a characteristic essentially that of the third-order maximally flat envelope delay (Bessel) response. The data response of the discriminator is down 3 Db at the selected cutoff frequency, 10 Db at two times the cutoff frequency, and 25 Db at four times the cutoff frequency. The asymptotic slope is 18 Db per octave.

Model 210C-21 -- Designed for use with the Model 210B-21 Switchable-Bandwidth Channel Selector. The front panel contains a four-position switch for selection of the narrowband or wideband cutoff frequency and constant-amplitude or constant-delay response characteristic. The constant-amplitude response characteristic is the same as that of the Model 210C-01 in the "Amplitude" switch position. The constant-delay response characteristic is the same as that of the Model 210C-01 in the "Delay" switch position.

t. Output Voltage Limit: The output voltage is limited to 350% of the bandedge voltage or 15 volts, whichever is less.

u. "Signal Loss" Light: When the input signal amplitude is less than a predetermined level, a neon lamp on the front panel lights and the discriminator output is grounded. The signal-loss level is adjustable up to at least 25 millivolts RMS and is normally adjusted at the factory to 5 millivolts at band center. This adjustment enables the operator to set the zero-signal level for optimum signal-to-noise

performance and convenience. The signal-loss clamp circuit has slow attack and fast release times to provide optimum performance in the presence of tape dropouts or rapid signal fading.

v. "Lock Loss" Light: A neon lamp on the front panel provides visual indication of loss-of-lock operation.

w. Line-Voltage Sensitivity: A 10-volt step of line voltage anywhere between 108 and 132 volts causes a peak transient of less than 0.1% of bandwidth at the output of the discriminator.

x. Power Requirement: 108 to 132 volts, 47 to 420 CPS, single phase (13 watts per discriminator at maximum load and at 120 volts when a Model 223B-01 Power Supply is used with six Model 210 Discriminators). The Model 223B-02 Power Supply is identical to the Model 223B-01 except for the line-voltage rating, 207 to 253 volts.

### 2.1.2 Mechanical Specifications

a. Panel Size: Model 210 Discriminator is 5-1/4 inches high and occupies 3 modular widths (2-7/16 inches).

b. Over-All Depth: 16-3/8 inches excluding projections from the front panel, not including the rack adapter.

c. Operating Temperature Range: 10 degrees to 50 degrees centigrade circulating air.

d. Storage Temperature Range: -55 degrees to +85 degrees centigrade.

Table 2-1. IRIG-Standard Channels and Cutoff Frequencies

| IRIG CHANNEL NUMBER | CHANNEL CENTER FREQ. (KC) | DEVIATION | DATA CUTOFF FREQ. (CPS) |
|---|---|---|---|
| 1 | 0.40 | ±7.5% | 00006.0 |
| 2 | 0.56 | ±7.5% | 00008.4 |
| 3 | 0.73 | ±7.5% | 00011.0 |
| 4 | 0.96 | ±7.5% | 00014.0 |
| 5 | 1.30 | ±7.5% | 00020.0 |
| 6 | 1.70 | ±7.5% | 00025.0 |
| 7 | 2.30 | ±7.5% | 00035.0 |
| 8 | 3.00 | ±7.5% | 00045.0 |
| 9 | 3.90 | ±7.5% | 00059.0 |
| 10 | 5.40 | ±7.5% | 00081.0 |
| 11 | 7.35 | ±7.5% | 00110.0 |
| 12 | 10.5 | ±7.5% | 00160.0 |
| 13 | 14.5 | ±7.5% | 00220.0 |
| 14 | 22.0 | ±7.5% | 00330.0 |
| 15 | 30.0 | ±7.5% | 00450.0 |
| 16 | 40.0 | ±7.5% | 00600.0 |
| 17 | 52.5 | ±7.5% | 00790.0 |
| 18 | 70.0 | ±7.5% | 01050.0 |
| 19* | 93.0 | ±7.5% | 01395.0 |
| 20* | 124.0 | ±7.5% | 01860.0 |
| 21* | 165.0 | ±7.5% | 02475.0 |
| A | 22.0 | ±15% | 00660.0 |
| B | 30.0 | ±15% | 00900.0 |
| C | 40.0 | ±15% | 01200.0 |
| D | 52.5 | ±15% | 01600.0 |
| E | 70.0 | ±15% | 02100.0 |
| F* | 93.0 | ±15% | 02790.0 |
| G* | 124.0 | ±15% | 03720.0 |
| H* | 165.0 | ±15% | 04950.0 |

*Proposed but not officially adopted by IRIG.

# SECTION 3

# INSTALLATION AND OPERATION

## 3.1 INSTALLATION

### 3.1.1 Unpacking

The EMR Model 210 Subcarrier Discriminator is shipped complete with all printed-circuit cards and chassis covers. Plug-in units, Models 210B, 210C and 210T and associated modular equipment such as rack adapters, power supplies and test adapters are packaged separately. The mating connector for the Model 210A is contained in the rack adapter.

A system designator, marked in accordance with the ordering information for the rack adapter, is installed in each discriminator. If marking information is not included with the order, a blank designator is installed which can be marked by the customer.

Report at once any shortages or damage to the equipment, in accordance with the instructions on the reverse side of the EMR Purchase Order Acknowledgement (POA).

### 3.1.2 Mounting

Model 210 Discriminators mount in the Model 222A Rack Adapter and are used with a Model 223B Power Supply. A typical FM data-decoding modular rack adapter is illustrated in Figure 1-2. The discriminator, with or without the channel selector and output filter plug-in units, slides into the rack adapter and latches into a slotted rail at the bottom.

Rack adapters are assembled and wired in accordance with customer ordering information. Assembly and wiring details for each rack adapter are contained in the pertinent instruction manual. The position of each discriminator in the rack adapter is indicated by means of the system designator.

### 3.1.3 Cooling

The total heat dissipation of each discriminator is 7.7 watts at full load and 6.0 watts at no load. Grilles for natural convection or forced-air cooling are provided in the top and bottom covers of the discriminator; grille locations and heat dissipation are as shown in Figure 3-1. The Model 222A Rack Adapter is open at the top and bottom in these areas.

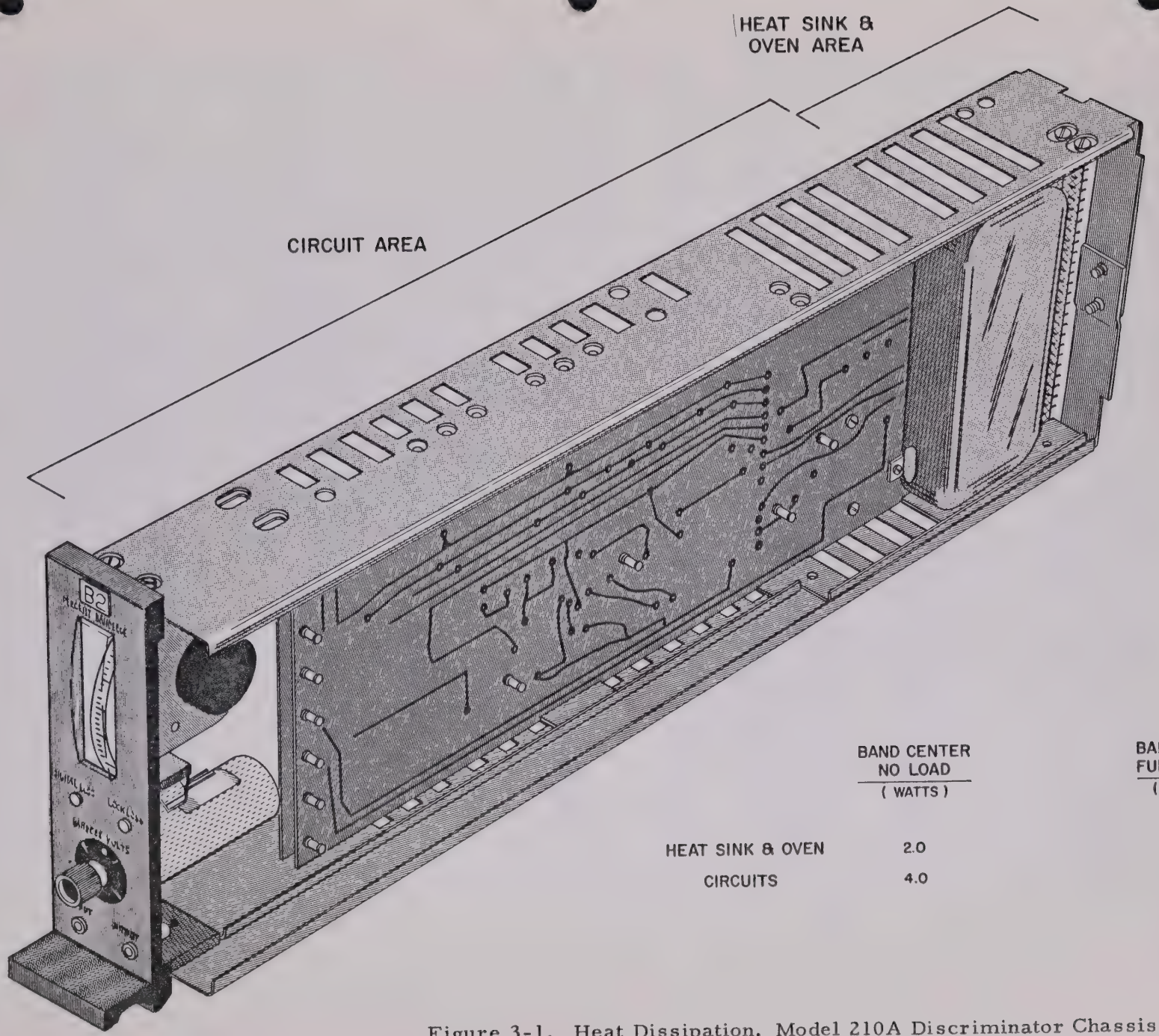


| | BAND CENTER NO LOAD (WATTS) | BAND EDGE FULL LOAD (WATTS) |
|---|---|---|
| HEAT SINK & OVEN | 2.0 | 3.7 |
| CIRCUITS | 4.0 | 4.0 |

Figure 3-1. Heat Dissipation, Model 210A Discriminator Chassis

Adequate cooling must be provided to limit the ambient operating temperature of the equipment to the maximum of 50 degrees centigrade. Due to the compactness of the equipment, it is recommended that forced-air cooling be used for all installations consisting of more than one complete modular rack adapter (six discriminators and a power supply) in a rack at normal room temperature.

### 3.1.4 Electrical Connections

External connections to the Model 210 Discriminator are made through the rear connector (1P1), an Amphenol type 133-022-23 twenty-two pin male connector.

Wiring in the Model 222A Rack Adapter from the module connectors to outgoing terminal connectors mounted at a rear connection plate is accomplished at the factory in accordance with customer ordering information. A connection diagram for each rack adapter is contained in the pertinent instruction manual for the Model 222A Rack Adapter.

Refer to Figure 3-2 for external connections to the Model 210A Discriminator rear connector (1P1).

### 3.1.5 Power Source

Each Model 210 Discriminator receives the following power from the Model 223B Power Supply:

-105 volts DC ±5 volts, unregulated, at 0.02 ampere
-26 volts DC, ±1 volt, unregulated, at 0.25 ampere
+17.5 volts DC, ±0.87 volt, regulated, at 1.5 amperes
-17.5 volts DC ±0.87 volt, regulated, at 1.5 amperes

The Model 223B-01 Power Supply operates from a source of 108 to 132 volts, 47 to 420 CPS and requires 78 watts at 120 volts when used with six discriminators operated at full load. The Model 223B-02 Power Supply operates from a source of 207 to 253 volts, 47 to 420 CPS and is otherwise identical to the Model 223B-01 Power Supply.

## 3.2 OPERATION

### 3.2.1 Location and Function of Controls, Test Points and Indicators

The controls, test points and indicators used in the operation and maintenance of the discriminator are shown in Figures 3-3 through 3-12. Tables 3-1 through 3-10 describe the components shown in the associated illustrations.

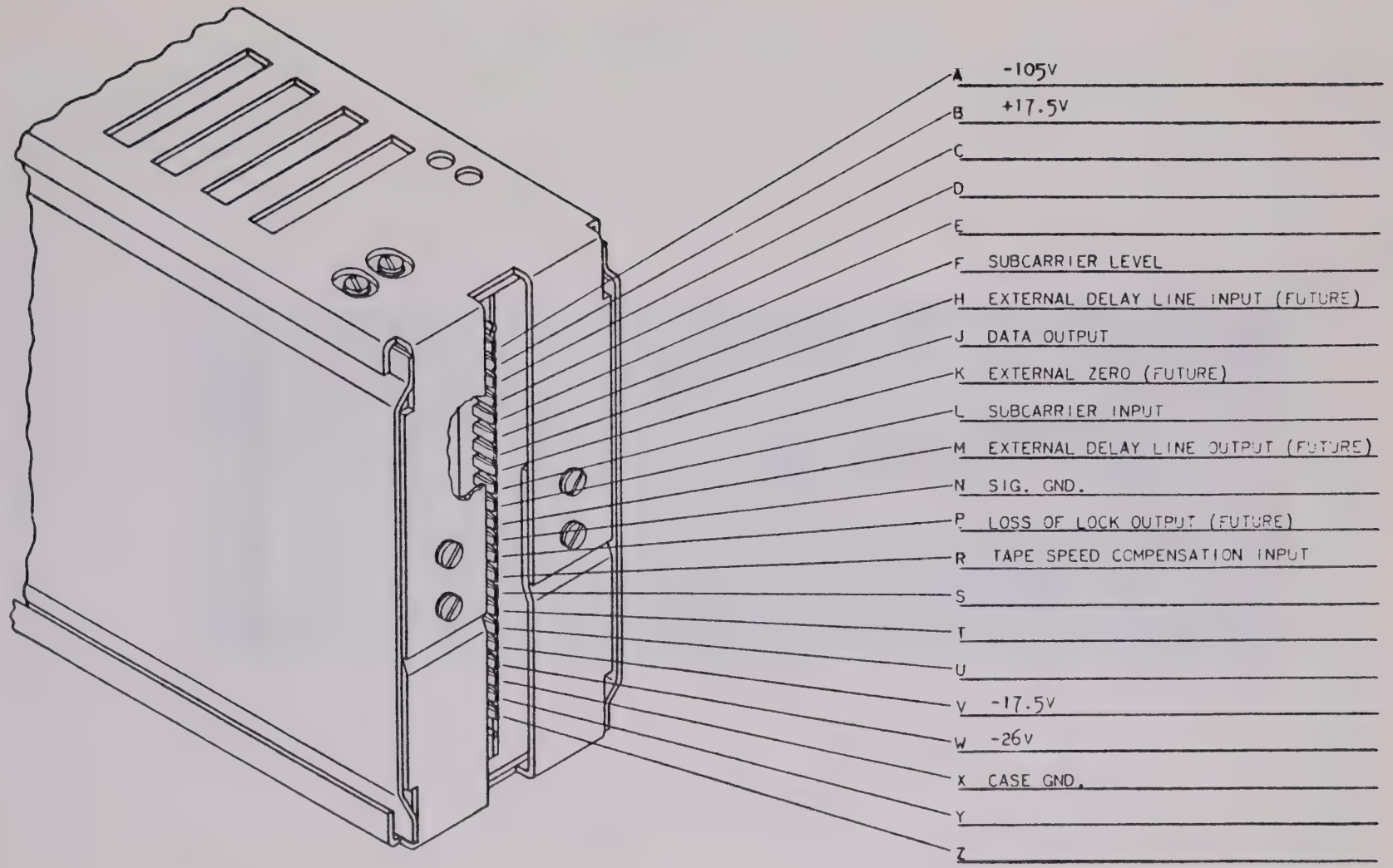


Figure 3-2. External Connections, Model 210A Discriminator Chassis

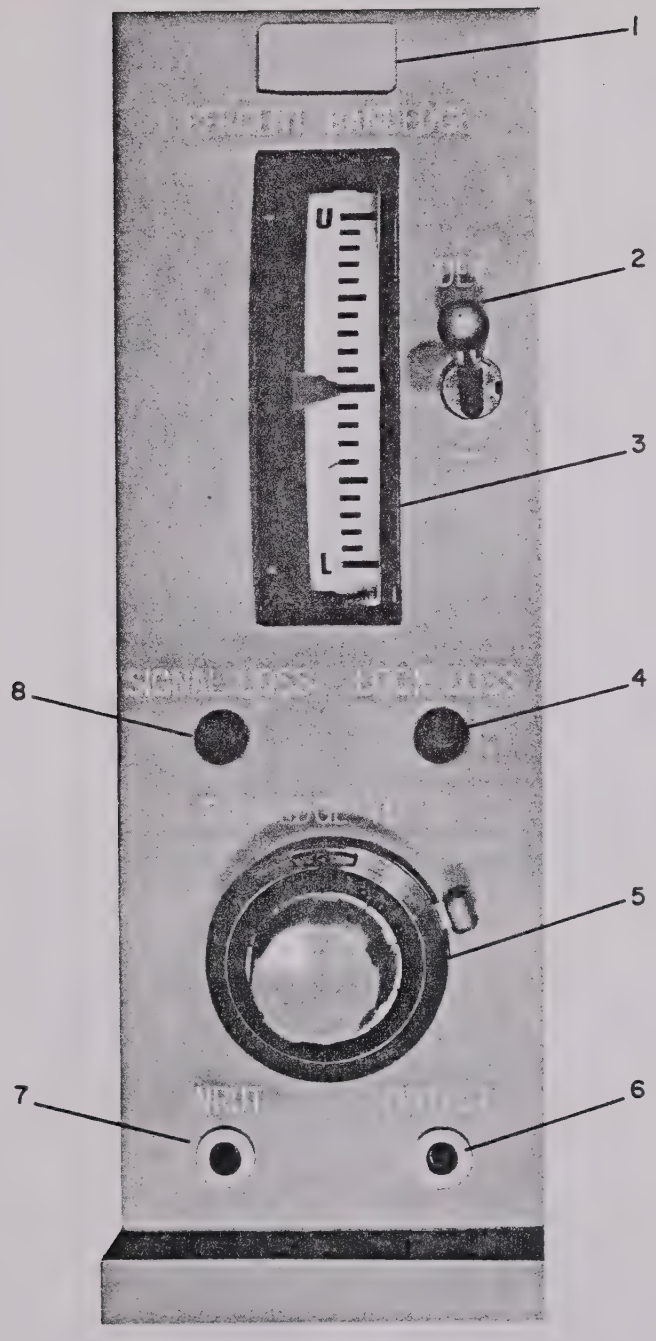


Figure 3-3. Location of Front Panel Controls and Indicators, Model 210A Discriminator (Ref. Table 3-1)

Table 3-1. Function of Front Panel Controls and Indicators, Model 210A Discriminator (Ref. Figure 3-3)

| Ref. No. | Name | Nomenclature | Type | Function |
|---|---|---|---|---|
| 1 | System Designator | None | Lettered plastic tag | Specifies assigned location of discriminator. |
| 2 | DEV switch | 7SW901 | Toggle switch | Allows selection of negative or positive deviations sense (used on 210A-04 and 210A-05 only). |
| 3 | PERCENT BANDEDGE meter | 4M201 | Center-balance movement; ±3.0-volt full-scale deflection with multiplier-resistor | Indicates the percentage of bandwidth. |
| 4 | LOCK LOSS indicator | 4DS302 | 90-volt neon lamp | Lights to indicate loss-of-lock of the phase-locked-loop FM detector. |
| 5 | BANDEDGE VOLTS control | 4R636 | 9-turn, 900-ohm potentiometer | Used to adjust output voltage amplitude. |
| 6 | OUTPUT test jack | 4J601 | White TP jack | Used to monitor output. |
| 7 | INPUT test jack | 4J101 | White TP jack | Used to monitor output of BPIF. |
| 8 | SIGNAL LOSS indicator | 4DS301 | 90-volt neon lamp | Lights to indicate input signal less than a predetermined level. |

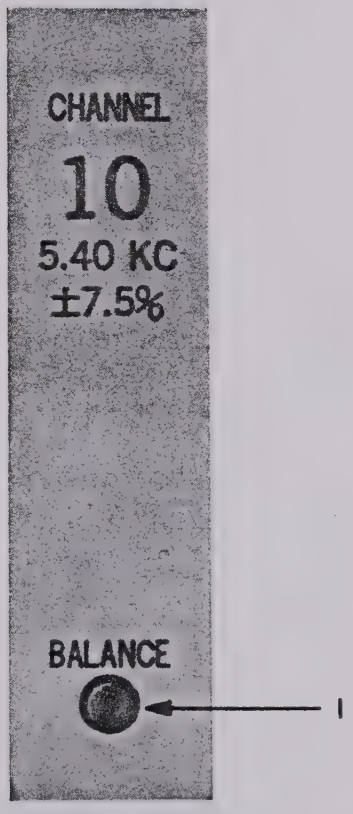


Figure 3-4. Location of Front Panel Control, Model 210B-01, 210B-05, and 210B-06 Channel Selector (Ref. Table 3-2)

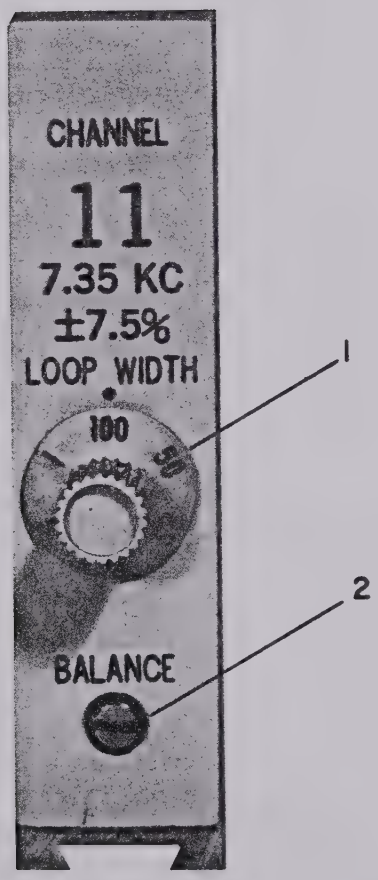


Figure 3-5. Location of Front Panel Controls, Model 210B-02 and 210B-07, Channel Selector (Ref. Table 3-3)

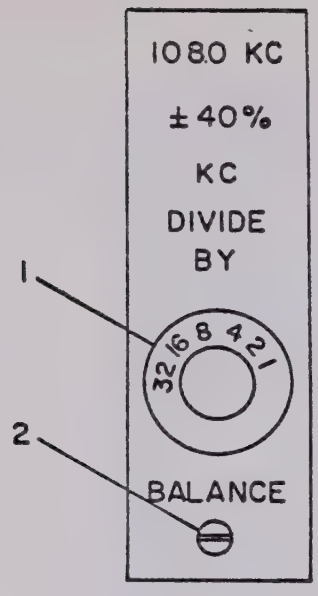


Figure 3-6. Location of Front-Panel Controls, Model 210B-11 Channel Selector (Ref. Table 3-4)

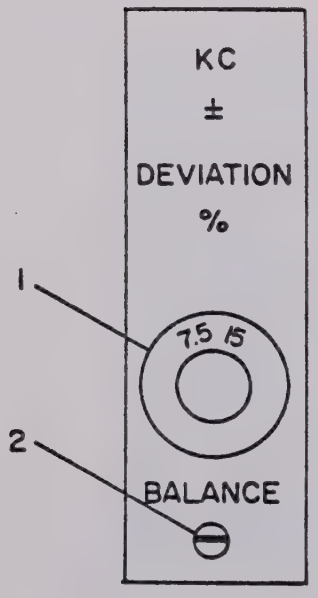


Figure 3-7. Location of Front-Panel Controls, Model 210B-21 Channel Selector (Ref. Table 3-5)

Note:
1. EMR Drawing Control No. 210-001.

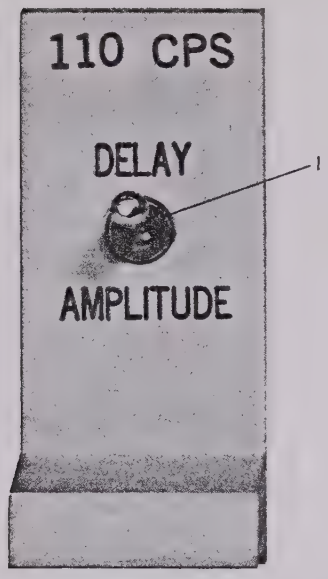


Figure 3-8. Location of Front Panel Control, Model 210C-01 Output Filter (Ref. Table 3-6)

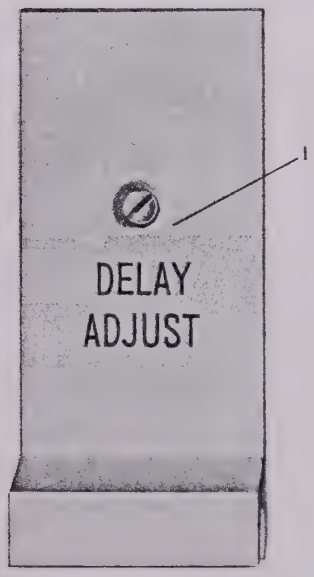


Figure 3-9. Location of Front Panel Control, Models 210C-06 and 210C-07 Output Filter (Ref. Table 3-7)

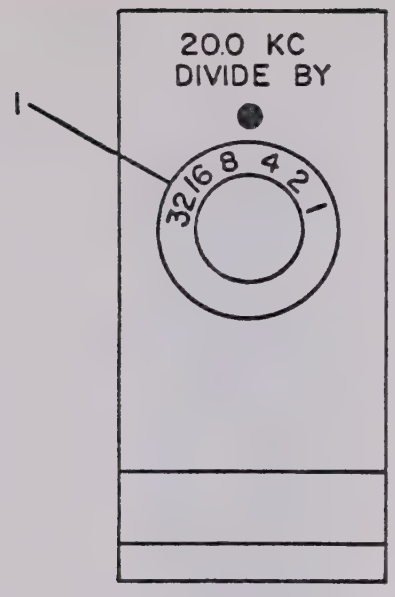


Figure 3-10. Location of Front-Panel Control, Model 210C-11 Output Filter (Ref. Table 3-8)

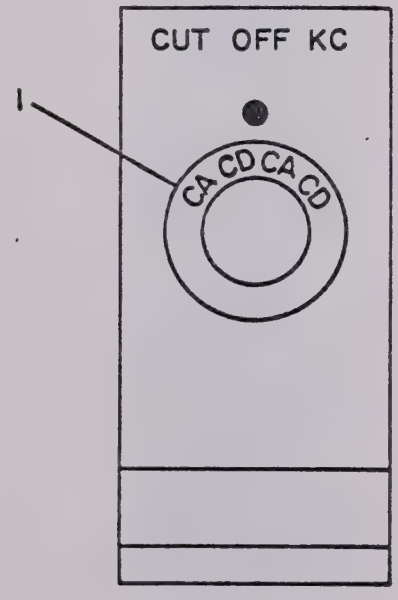


Figure 3-11. Location of Front-Panel Control, Model 210C-21 Output Filter (Ref. Table 3-9)

Note:
EMR Drawing Control No. 210-002.

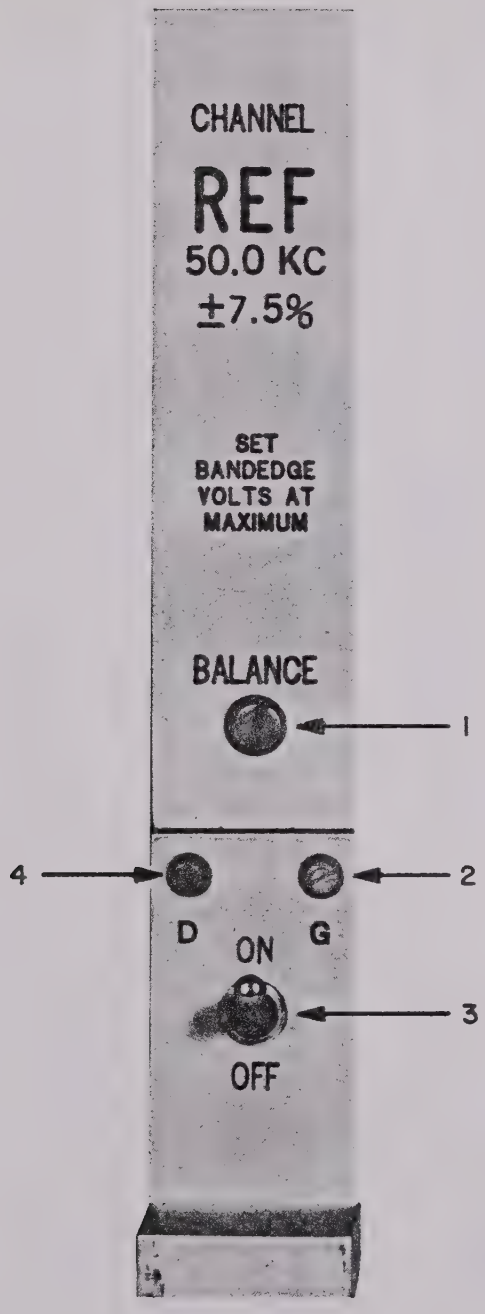


Figure 3-12. Location of Front Panel Controls, Model 210T Reference Channel Selector (Ref. Table 3-10)

Table 3-2. Function of Front Panel Control, Model 210B-01 Channel Selector (Ref. Figure 3-4)

| Ref. No. | Name | Nomen-clature | Type | Function |
|---|---|---|---|---|
| 1 | BALANCE control | 5R421 | Five-turn potentiometer | Used to provide the desired output voltage with a known input frequency anywhere in the pass band. |

Table 3-3. Function of Front Panel Controls, Model 210B-02 Channel Selector (Ref. Figure 3-5)

| Ref. No. | Name | Nomen-clature | Type | Function |
|---|---|---|---|---|
| 1 | LOOP WIDTH selector | 5SW201 | Six-position rotary switch | Used to set loop-amplifier bandwidth deviation ratio at 1, 5, 10, 25, 50, or 100. |
| 2 | BALANCE control | 5R421 | Five-turn potentiometer | Used to provide the desired output voltage with a known input frequency anywhere in the pass band. |

Table 3-4. Function of Front Panel Controls, Model 210B-11 Channel Selector (Ref. Figure 3-6)

| Ref. No. | Name | Nomen-clature | Type | Function |
|---|---|---|---|---|
| 1 | DIVIDE BY switch | S1 | Six-position rotary switch | Used to select one of the six IRIG-standard wideband FM record center frequencies (108, 54, 27, 13.5, 6.75, or 3.375 Kc). |
| 2 | BALANCE control | R1 | Multi-turn potentiometer | Used to provide the desired output level for the selected input frequency anywhere within the pass band. |

Table 3-5. Function of Front Panel Controls, Model 210B-21 Output Filter (Ref. Figure 3-7)

| Ref. No. | Name | Nomen-clature | Type | Function |
|---|---|---|---|---|
| 1 | ± DEVIATION % switch | S1 | Two-position rotary switch | Provides for selection of either 7.5% or 15% deviations of subcarrier center frequency (22 Kc and above). |
| 2 | BALANCE control | R1 | Multi-turn potentiometer | Used to provide the desired output voltage with a known input frequency anywhere within the pass band. |

Table 3-6. Function of Front Panel Control, Model 210C-01 Output Filter (Ref. Figure 3-8)

| Ref. No. | Name | Nomen-clature | Type | Function |
|---|---|---|---|---|
| 1 | DELAY/ AMPLITUDE switch | 6S2601 | DPDT toggle switch | Used to select output response. |

Table 3-7. Function of Front Panel Control, Model 210C-06 and 210C-07 Output Filter (Ref. Figure 3-9)

| Ref. No. | Name | Nomen-clature | Type | Function |
|---|---|---|---|---|
| 1 | DELAY ADJUST | 6R605 | Multi-turn potentiometer | Used to adjust delay. |

Table 3-8. Function of Front Panel Control, Model 210C-11 Output Filter (Ref. Figure 3-10)

| Ref. No. | Name | Nomen-clature | Type | Function |
|---|---|---|---|---|
| 1 | DIVIDE BY switch | S1 | Six-position rotary switch | Provide switch selection of six cutoff frequencies (20, 10, 5, 2.5, 1.25, or 0.625 Kc). |

Table 3-9. Function of Front Panel Control, Model 210C-21 Output Filter (Ref. Figure 3-11)

| Ref. No. | Name | Nomen-clature | Type | Function |
|---|---|---|---|---|
| 1 | CUT OFF KC switch | S1 | Four-position rotary switch | Provides switch selection of cutoff frequency and response characteristic as follows:<br><br>Position — Cutoff — Response<br>CA (Black) — 0.12 Kc — Constant Amplitude<br>CD (Black) — 0.12 Kc — Constant Delay<br>CA (White) — 0.21 Kc — Constant Amplitude<br>CD (White) — 0.21 Kc — Constant Delay |

Table 3-10. Function of Front Panel Controls, Model 210T
Reference Channel Selector (Ref. Figure 3-12)

| Ref. No. | Name | Nomen-clature | Type | Function |
|---|---|---|---|---|
| 1 | BALANCE control | 5R421 | 5-turn potentiometer | Used to zero-set output voltage. |
| 2 | G control | 5R654 | 200 ohn, 25-turn trim potentiometer | Used to adjust gain. |
| 3 | ON/OFF switch | 5SW601 | DPDT toggle switch | Used to turn tape-speed compensation signal on and off. |
| 4 | D control | 5R655 | 1K, 25-turn trim potentiometer | Used to adjust delay. |

### 3.2.2 Tape Speed Compensation

The Model 210 Discriminator can be compensated for magnetic-tape recorder/reproducer speed changes with a system similar to that shown in Figure 3-9. In this system a reference frequency is recorded simultaneously with the composite subcarrier signal; on playback, a Model 210A Discriminator with a Model 210T Reference Channel Selector operating at the reference frequency is used to introduce a correction voltage into the data discriminator to reduce the effects of speed-change errors. In order to achieve compensation, the error signal must have the correct amplitude and phase.

Since the bandpass input filters of the reference discriminator and all data discriminators have time delays, each dependent upon the channel center frequency and deviation, delay networks are needed to compensate for each delay. For maximum flexibility in a tape-speed-compensation system, an EMR Model 230A or 230B Signal Delay Unit with one or two 230-01 Delay Lines are used to match the delay of the reference discriminator. The delay of each data-discriminator bandpass filter is matched by a delay network built into the Model 210B Channel Selector. Thus, after a system is set up, the data channels can be changed or added without upsetting the balance of the over-all system.

The input to the delay network contained in the Model 210B Channel Selector is brought out to pin R of the discriminator rear connector (1P1). When tape-speed compensation is to be applied, this pin is connected to the output of the reference disciminator (pin J). Pin R of connector 1P1 of the reference discriminator is then connected to signal ground pin N. When data discriminators are used in a system not employing tape-speed compensation, pin R of connector 1P1 is connected to pin N for all discriminators. When data discriminators are used in a system employing tape-speed compensation, the compensation may be disabled by placing the TSC switch on the reference channel selector panel in the OFF position.

In a Model 210 Subcarrier Discriminator system, connections to discriminator rear connectors (1P1) are made in the rack adapter; for external connections refer to the instruction manual for the specific Model 222A Rack Adapter.

NOTE

The BANDEDGE VOLTS control on the front panel of the discriminator must be set at maximum (full clockwise) for proper operation of the tape-speed compensation system. A cautionary note to this effect is on the front panel of the reference channel selector.

### 3.2.3 Selection of Reference Frequency

The reference channel must be spaced sufficiently far away from adjacent channels so that crosstalk and intermodulation will not occur. Its bandwidth must be sufficient to pass the wow-and-flutter frequencies that are to be compensated.

The standard reference channels available, as specified by IRIG, are as follows:

| Reference Frequency (Kc) and Deviation (%) | Highest Frequency IRIG Data Channel Compensated | |
|---|---|---|
| | IRIG Chan. No. | Freq. (Kc) |
| 100 - ±7.5 | 18<br>or<br>E | 70 ±7.5%<br>or<br>70 ±15% |
| 50 - ±7.5 | 16<br>or<br>B | 40 ±7.5%<br>or<br>30 ±15% |
| 25 - ±7.5 | 13 | 14.5 ±7.5% |

Model 230 Signal Delay Lines are furnished with delays matching the reference channel selector.

Reference channels other than standard are available on special order. The usual practice for non-standard tape-speed-compensation systems is to use the next-higher numbered IRIG channel above the highest numbered IRIG data channel on the reference channel; this practice allows adequate reference channel bandwidth and interchannel spacing.

### 3.2.4 Time-Correlated Data Systems

The data outputs of Model 210 Discriminators can be time-correlated with a system similar to that shown in Figure 3-14. Tape-speed compensation, as described in Paragraph 3.2.2, can be incorporated in the time-correlated system if desired. In this system, the total modulation delay of all data channels is adjusted to be the same as the modulation delay of the channel of the lowest subcarrier bandwidth (designated the zero time reference channel).

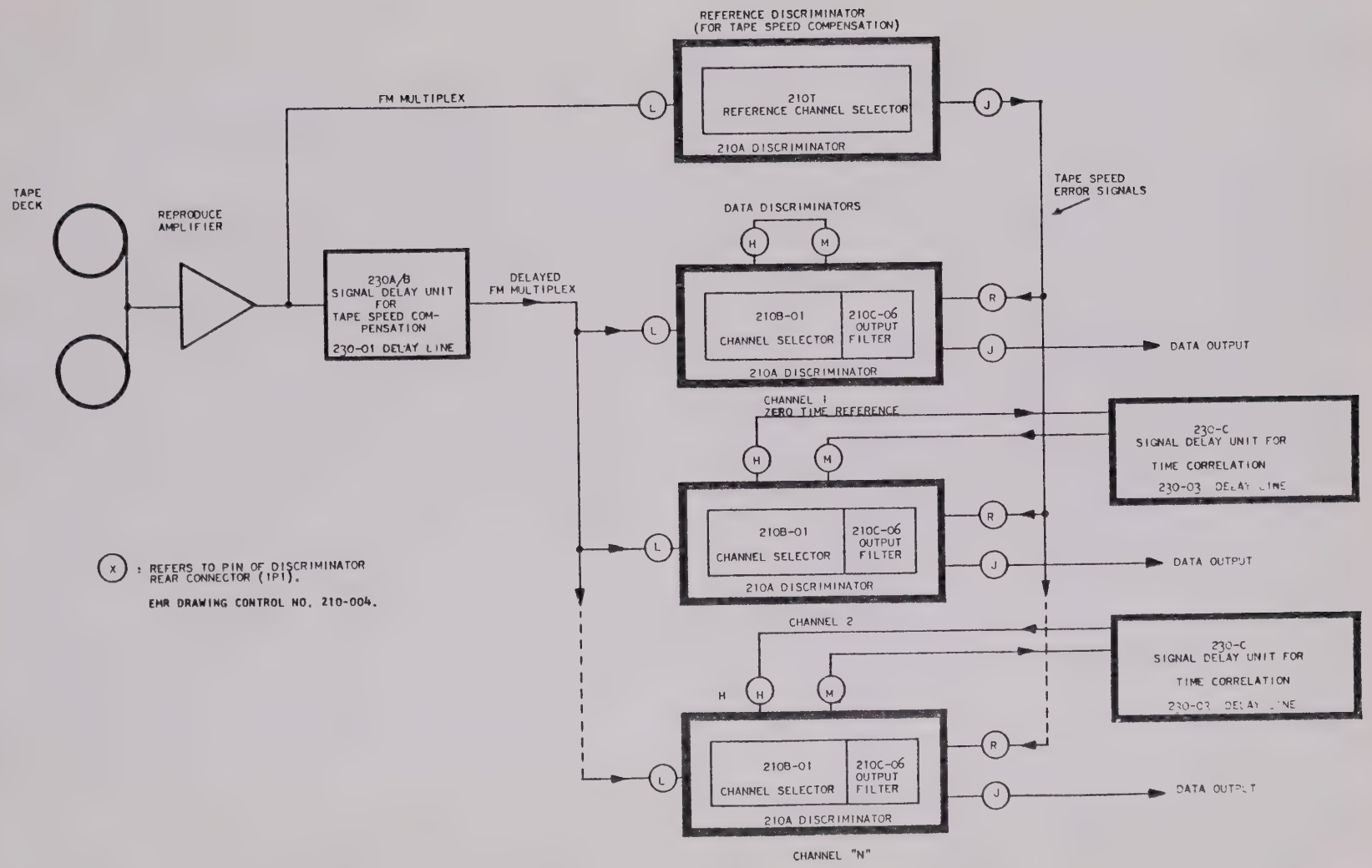


Figure 3-14. Block Diagram, Time-Correlated Subcarrier Discriminator System

In a time-correlated discriminator system, an EMR Model 230 Signal Delay Unit is connected between pins M and H on plug 1P1, as shown in Figure 3-10, of each Model 210 Data Discriminator (except the zero time reference channel in which pins M and H are jumpered together).

Electrically, the delay unit connects between the phase-locked-loop FM detector and the output filter/amplifier. (See schematic diagram, Figure 5-8.) The time delay of each data-channel signal delay unit is equal to the delay of the bandpass input filter and FM detector of the zero time reference channel minus the delay of the input filter and FM detector of the data channel; thus, the outputs of all data channel FM detectors are time-correlated with the output of the FM detector of the zero time reference channel.

The EMR Model 210C-06 or 210C-07 Output Filter, containing a manual DELAY ADJUST control, is used in time-correlated systems. The front panel DELAY ADJUST control is provided to compensate manually for minor system delays, such as delay inaccuracy of the bandpass input filters, signal delay units, and the delay contributed by the transmission voltage-controlled oscillators, emphasis networks and tape recorder. Each time-correlated subcarrier discriminator system is designed in accordance with specific time-correlation ordering information. The complete system is factory tested and adjusted prior to shipment. Since adjustments are made with specific equipments, channel selectors, signal delay units, and output filters are marked to be used in trios coordinated by serial number.

# SECTION 4

# THEORY OF OPERATION

## 4.1 GENERAL

This section describes the theory of operation of the Model 210 Subcarrier Discriminator. Overall system theory is discussed in Paragraph 4.2 with reference to the system block diagram shown in Figure 4-1. The detailed theory is discussed in Paragraph 4.3 with reference to the system block diagram shown in Figure 4-1 and schematic diagrams in Section 5, Maintenance, of this manual.

Figure 5-8 is a functional schematic diagram of the Model 210 Subcarrier Discriminator and shows all discriminator circuits in logical order. As outlined in the drawing notes, all component designations are coded to show component location, type, and the circuit in which the component is used. The component designations are as follows:

Component Location Designation

1: Main Printed-Circuit Card Assembly -- example 1R209
2: Secondary Printed-Circuit Card Assembly -- example 2C703
3: VCO Oven Assembly
4: Front Panel Assembly
5: Channel Selector Plug-In (Model 210B)
6: Output Filter Plug-In (Model 210C)
7: Inverting Amplifier

Component Circuit Designation

100: Limiter - example 5R101
200: Phase Detector and Loop Amplifier
300: Loss-of-Signal and Loss-of-Lock
400: Voltage-Controlled Oscillator
500: VCO Oven Controller
600: Output Amplifier
700: Chopper Amplifier
800: Power Supply Regulators
900: Inverting Amplifier

The output amplifier, chopper amplifier, and power-supply regulator circuits are physically located on the secondary printed-circuit card assembly; all

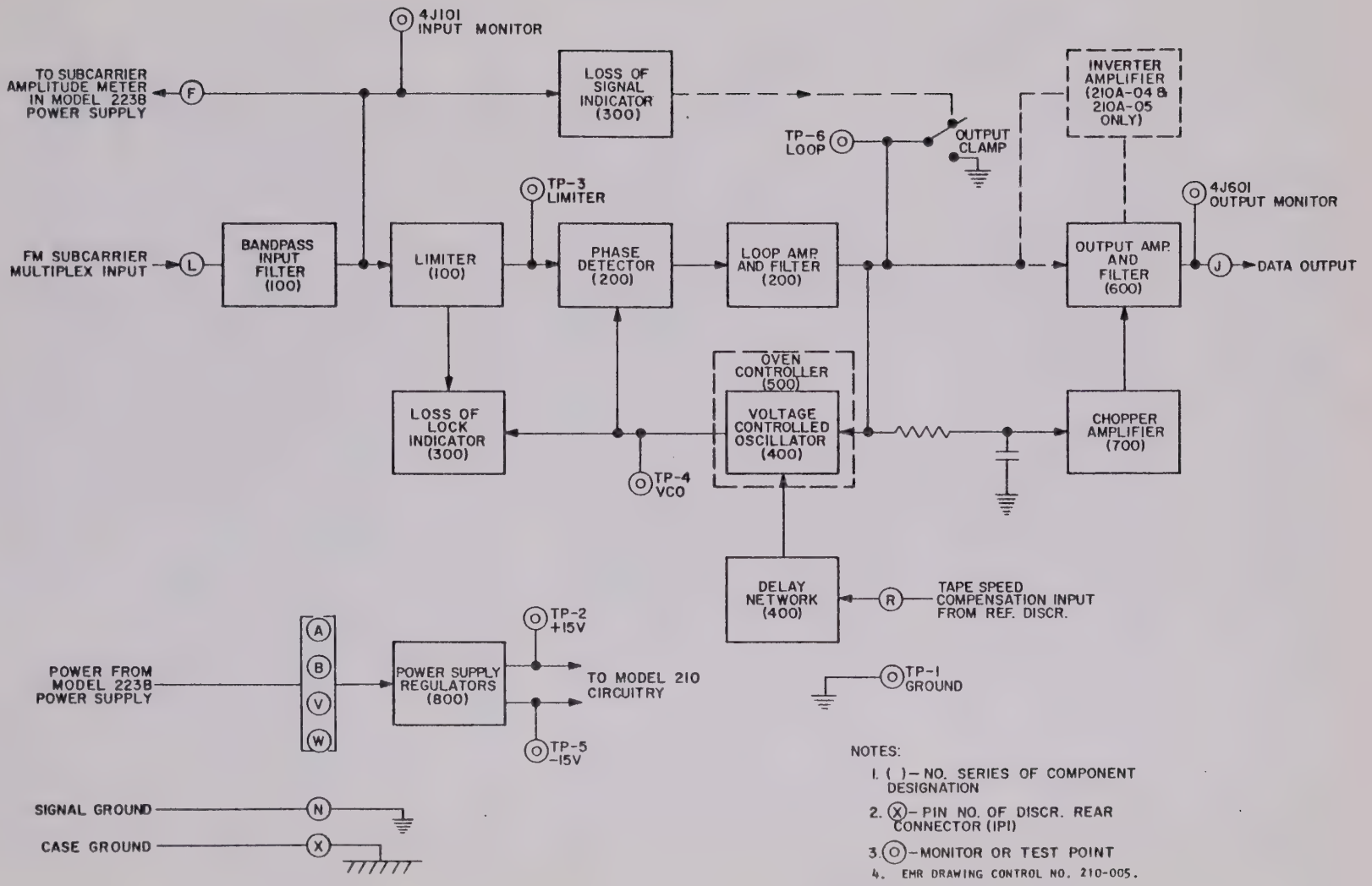


Figure 4-1. Block Diagram, Model 210 Subcarrier Discriminator

other circuits are located on the main card assembly except for front-panel controls and plug-in modules. The VCO oven assembly is part of the main card assembly.

## 4.2 SYSTEM OPERATION

The FM subcarrier multiplex input signal (see Figure 4-1) is applied to the bandpass input filter (BPIF) located in the Model 210B Channel Selector. The BPIF is tuned to pass only a selected subcarrier channel of the FM multiplex. The output of the BPIF is applied to the SUBCARRIER AMPLITUDE meter on the Model 223B Power Supply front panel and to the limiter circuit in the 210A Discriminator. The limiter has sufficient gain to provide a substantially constant amplitude square-wave output to the FM detector throughout the 60 Db input signal range.

A phase-locked-loop FM detector is employed for detection of the selected FM subcarrier. The phase-locked-loop FM detector provides improved signal-to-noise performance compared to other means of FM detection. The phase-locked-loop detector consists of the phase detector, voltage-controlled oscillator (VCO), and loop amplifier and filter connected as a second-order feedback system. The DC component of the output of the phase detector is proportional to the phase error between the limiter and VCO signals; 90 degree phase shift is considered as the zero phase error reference. The phase detector output is amplified and filtered by the loop amplifier and filter, and applied to the VCO in a manner to drive the oscillator to the same frequency as the limiter output signal and reduce the phase error to zero. The static frequency error is, therefore, always zero and the DC component of the loop amplifier and filter output or VCO input signal is the detected signal.

The detected signal is filtered and amplified by the output amplifier and filter to provide a data output signal suitable for driving galvanometers. decommutators, etc.

Temperature sensitive components of the VCO are operated in an oven at a constant temperature regulated by the oven controller. Zero drifts in the output amplifier and filter are eliminated by means of the chopper amplifier. The loss-of-lock circuitry provides an indication of loss-of-lock operation and poor input signal quality. The loss-of-signal circuitry provides an indication of low input signal level and clamps the discriminator data output to ground for input signals of amplitude less than a preset level. A delay network is provided for completion of the tape speed compensation process. The power supply regulators provide highly regulated voltages to all critical circuitry of the discriminator.

## 4.3 DETAILED THEORY

### 4.3.1 Bandpass Input Filter (BPIF)

All components of the BPIF are contained in the Model 210B Channel Selector.

The purpose of the BPIF is to separate a selected subcarrier from the multiplex and reduce the effect of interfering signals. The filter circuitry itself, however, could be the cause of interference. If there was a non-linearity in the BPIF circuitry, a beat frequency in the passband of the filter could be generated by signals far removed from the passband of the filter.

The BPIF is a precision network utilizing all passive elements operated well below their saturation levels. Active elements are not used in or ahead of the BPIF circuitry to carry the multiplex signal; thus, additional noise is not introduced into the data channels at low signal levels and extremely large peak signal level capability is provided to virtually eliminate crosstalk due to nonlinear amplification.

The BPIF is of a special design so that input impedance increases at frequencies out of the passband. The input impedance at band center is greater than 100K ohms for data frequencies up to and including 10.5 Kc, and exceeds 10K ohms for frequencies beyond 10.5 Kc up to 100 Kc. When 18 Model 210 Discriminators are connected in parallel in an 18-channel IRIG subcarrier discriminator system, the system input impedance is greater than 3000 ohms at any frequency from 200 CPS to 110 Kc.

Filter-terminating resistances are contained in the BPIF assembly (5FL101). Thus, the BPIF is operated with theoretical zero source impedance (less than 500 ohms) and infinite load impedance. A boot-strapped AC-coupled follower, consisting of transistors 5Q101, 5Q102 and 5Q103, is provided in each Model 210B Channel Selector after the BPIF to provide satisfactory BPIF terminating impedance and to drive the limiter, SUBCARRIER AMPLITUDE meter, and external equipment connected to the input monitor jacks (4J101) or pin F of the rear connector, 1P1. The complementary output stage of the follower is capable of driving up to 1000 Pf of connected capacity and is protected from output short-circuit damage.

The design of the BPIF is such that the time delay through the filter is constant for all subcarrier frequencies in the passband while maintaining sufficient attenuation to prevent adjacent channel interference. Bandwidths of ±7.5% and ±15% of center frequency are normally provided; other bandwidths from ±2.5% to ±40% are supplied on special order. The overall BPIF insertion loss is 6 Db from the subcarrier multiplex input, pin L of 1P1, to the BPIF output, pin F of 1P1.

### 4.3.2 SUBCARRIER AMPLITUDE Meter

The SUBCARRIER AMPLITUDE meter and its associated DISCRIMINATOR and METER RANGE switch are mounted on the front panel of the Model 223B Power Supply. The meter indicates the RMS magnitude of the subcarrier signal at the output of the BPIF of each discriminator in the rack adapter but is

calibrated with reference to the center-frequency amplitude of the subcarrier signal of the discriminator input. Because of the 6-Db insertion loss of the BPIF at center frequency, the voltage at the input monitor jack (4J101) or pin F of discriminator rear connector 1P1, which is the input signal to the SUBCARRIER AMPLITUDE meter, is one-half the voltage at the input of the discriminator, pin L of 1P1, as indicated by the SUBCARRIER AMPLITUDE meter at center frequency. The theory of operation of the SUBCARRIER AMPLITUDE meter is included in the instruction manual for the Model 223B Power Supply.

### 4.3.3 Limiter

Three limiting stages are employed to provide the 60-Db dynamic-input signal range capabilities of the discriminator. The first stage is a non-linear voltage divider consisting of resistor 1R120 and diodes 1CR102 and 1CR103 connected in parallel in reversed polarity. The input to the divider is a sinusoidal signal of amplitude 5 millivolts RMS to 5 volts RMS. The diodes have very high resistance for voltages less than approximately 0.64 volt, and low resistance for voltages greater than 0.64 volt: the output voltage of the non-linear divider is thus limited to 0.64 volt peak. The output of the first limiter stage is isolated from the following two limiter gain stages by a follower consisting of transistors 1Q104 and 1Q105.

The second limiter stage consists of transistors 1Q106 and 1Q107, and the third limiter stage consists of transistors 1Q108 and 1Q109, connected as operation amplifier gain stages employing diodes as non-linear feedback elements to limit their output voltages. Each gain stage consists of a common-emitter amplifier and an output emitter-follower. AC coupling and DC inverse feedback are employed for temperature stabilization. The output of the second limiter stage is limited to 0.64 volt peak, clamped by diodes 1CR104 and 1CR105. The output of the third limiter stage is set to 2.5 volts peak by the reverse-bias applied by a resistive voltage divider consisting of 1R113, 1R124, 1R132 and 1R133.

Inverted limiter outputs are provided by transistor 1Q111. Transistor 1Q110 is connected as an emitter-follower to drive the loss-of-lock circuit and the limiter output test point (TP-3).

The linear gain of the limiter is approximately 2000, and the 3-Db frequencies are 50 CPS and 500 Kc. For minimum input-signal level, only the third stage limits; for maximum input-signal level, all three stages limit.

### 4.3.4 Phase Detector-Loop Amplifier and Filter

This circuitry provides combined phase detection, amplification, and filtering with complimentary elements for temperature stabilization. The phase

detector consists of transistors 1Q207 and 1Q209, connected as constant current generators, which are switched on by the coincidence of the input signals to a pair of AND gates. The input signals to the AND gates are derived from the inverted output signal pairs from the limiter and voltage-controlled oscillator. Loop amplifier gain and filtering are obtained by passing the phase-detector output current through a selective network contained in the Model 210B Channel Selector.

Phase detector and loop amplifier waveforms are shown in Figure 4-2. Current generator A (1Q207) is turned on (+2.0 milliamperes) by the coincidence of positive limiter output A and positive VCO output A voltages at the bases of AND-gate transistors 1Q205 and 1Q206 (see waveforms 1, 2, and 3). Current generator B (1Q209) is similarly controlled by limiter output B and VCO B signals (refer to waveforms 4, 5, and 6). A constant -1.0 milliampere current is provided by current generator C (1Q202). The currents provided by generators A, B, and C are summed in the bus connected to the collectors of transistors 1Q202, 1Q207 and 1Q209; the sum is a square-wave current signal of magnitude 1.0 milliampere peak about zero, and of frequency twice the limiter or VCO signal frequency (refer to waveform 8).

Amplification of the phase detector output is accomplished by allowing the phase detector current to flow through a high-value resistor (1R210) and coupling to the balance of the discriminator circuitry through a follower featuring high input impedance and high current gain (transistors 1Q203, 1Q204 and 1Q211). Since the value of resistor 1R210 is 150K ohms, the peak output voltage of the loop amplifier (follower 1Q203, 1Q204 and 1Q211) would be 150 volts for a 90-degree error signal from the phase detector (refer to hypothetical waveform 9). The maximum signal range at the loop amplifier output however, is ±9 volts; clipping would occur at this level if the signal were not smoothed by the loop filter. The frequency-determining elements of the loop filter (5C203, 5C204, 5C205 and 5R206, contained in the Model 210B Channel Selector) determine the operating characteristics of the phase-locked-loop detector. The loop amplifier output, with the loop filter, is shown in waveform 10.

The DC gain of the phase detector-loop amplifier combination is 50. This will result in a 3.0-volt loop output, which is the voltage required to drive the voltage-controlled-oscillator to bandedge.

The static phase-locked-loop phase error, that is the phase error at bandedge, is 90 degrees divided by the DC loop gain, or less than 2 degrees. This low static phase error does not significantly deteriorate the signal-to-noise efficiency of the phase-locked-loop detector. Additional phase errors, due to temperature drift in this circuitry, are suppressed by the complementary arrangements of the current generators. The limiter output signals are AC-coupled to the phase detector coincidence gates and their switching levels are set; therefore, the phase detector also provides additional input-signal limiting.

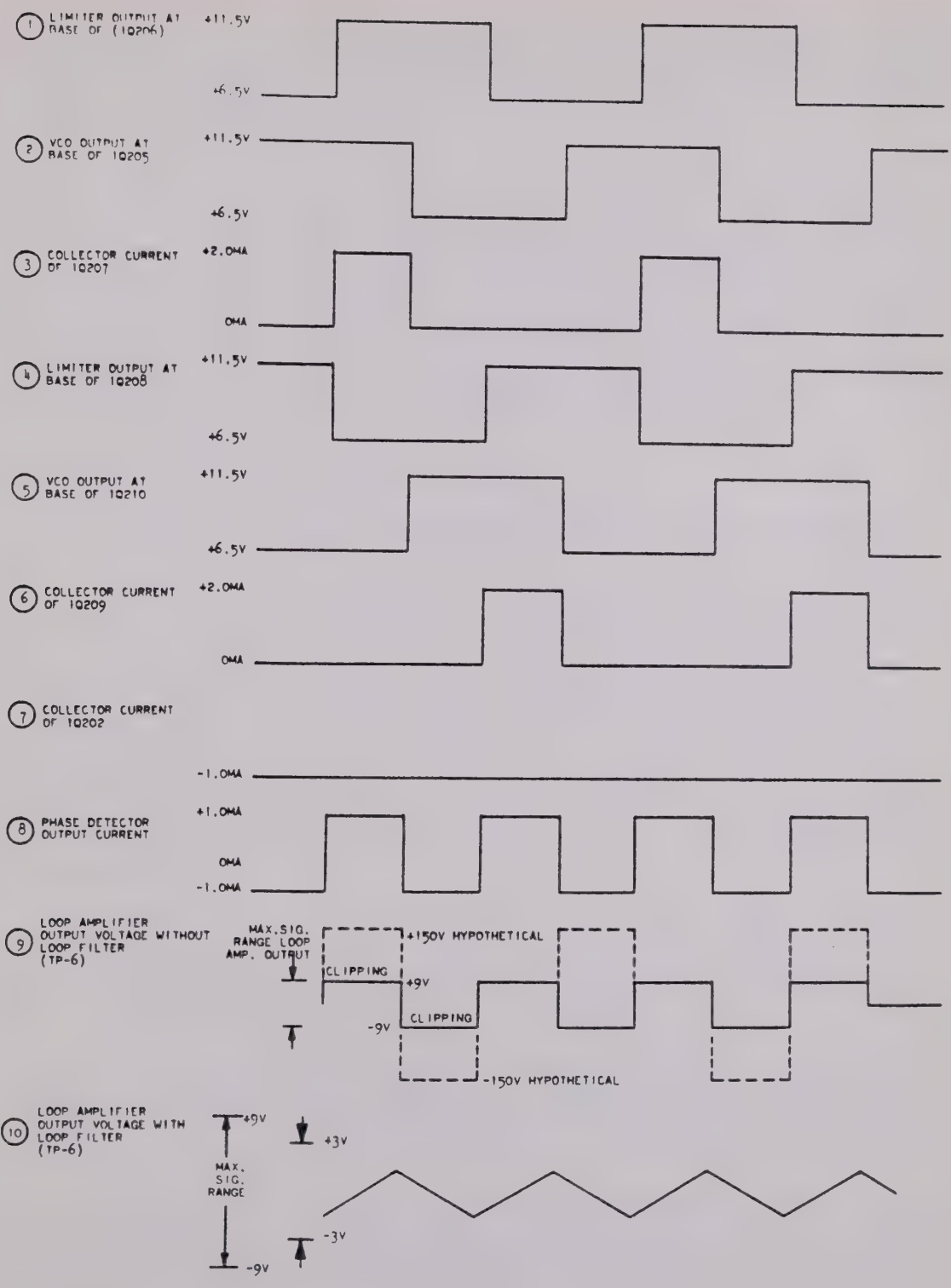


Figure 4-2. Idealized Waveforms, Model 210 Subcarrier Discriminator

The static phase error may be adjusted to zero degrees at band center by means of the phase balance control, 1R204, which sets the output of current generator C (1Q202). The limiter and VCO output signals can be monitored at test points TP-3 and TP-4 for this purpose.

The waveforms shown in Figure 4-2 are with zero phase error between the limiter and VCO signals (90-degree phase-displacement). During normal operation of the phase-locked-loop detector, modulation of the FM subcarrier results in a dynamic phase error in the linear range of ±90 degrees. The duty cycle of the rectangular wave shown in waveform 8 is dynamically modulated and the average signal represents the detected data signal. The output of the loop amplifier is then the data signal with the ripple (twice the subcarrier frequency) shown in waveform 10 superimposed. The second harmonic ripple is removed from the discriminator data output by the output filter.

### 4.3.5 Voltage-Controlled Oscillator (VCO)

The VCO consists of a modified astable (free-running) multivibrator and a bistable (flip-flop) multivibrator used for output-isolation and wave-shaping.

The frequency of the astable multivibrator, consisting of transistors 3Q405 and 3Q406, is determined by the discharge current of timing capacitors 5C411 and 5C412; this current is determined by the -15-volt regulated supply, timing resistors 5R426 and 5R427, and the input signal from the loop amplifier. Potentiometer 5R421 serves as an adjustment of VCO center frequency and is the BALANCE control on the front panel of the channel selector. The deviation sensitivity of the signal from the loop amplifier is set to +3.0 volts for upper bandedge deviation by the values of resistive divider 5R420 and 5R422. All the above-mentioned components are contained in the Model 210B Channel Selector.

Tape-speed compensation is accomplished by varying the return voltage to which the collectors of the astable multivibrator transistors are clamped by diodes 3CR406 and 3CR407. Low clamping impedance and isolation are provided by transistor 3Q407 connected as an emitter-follower.

The output of the astable multivibrator triggers the bistable multivibrator consisting of transistors 1Q401 and 1Q402 through low-value capacitors 1C405 and 1C406, thereby providing output isolation. The outputs of the bistable multivibrator are inverted square waves and are coupled to the phase detector.

The VCO design provides high linearity for the signal input and stability against power supply variations. Diode and transistor function polarities are reverse-connected and operating currents are adjusted to provide a very low temperature coefficient. All transistors and diodes which can affect the VCO operating

frequency are stable planar types; resistors are encapsulated low-temperature-coefficient metal-film types. The above considerations, the high stability of the power supplied, and the operation of the VCO in a controlled oven, provide the highly stable performance of the VCO.

### 4.3.6 VCO Oven Controller

All VCO components whose temperature would affect operating frequency are contained in a temperature-controlled oven. The VCO oven temperature is controlled at a constant 65 degrees centigrade by means of a contactless, continuous-control servo loop. Both the VCO and oven-controller components are contained in the oven; this system provides long-term stable operation without the reliability, cycling, and resetting problems associated with mechanical-contact type thermostats.

The continuous-control servo operates by sensing the temperature electrically, comparing the voltage to a standard, and controlling the oven heater with the amplified error signal. The error signal is obtained from a resistive bridge consisting of 3RT501 (a thermistor), 3R506, 3R507, and 3R509. Transistor 3Q501 is a differential amplifier connected to amplify the bridge unbalance. One leg of the bridge is a temperature-sensitive resistor (thermistor); the bridge is only in balance at the temperature determined by the thermistor resistance/temperature characteristic and bridge adjustment (set for balance at 65 degrees centigrade by the value of 3R505 in parallel with 3R506). The bridge error signal is amplified by transistors 3Q502, 3A503, and 3A504, and the output signal is applied to the oven heater 3HR501 in such a manner as to keep the bridge in balance and the internal oven temperature constant regardless of the operating temperature of the discriminator in its range.

### 4.3.7 Inverting Amplifier

The inverting amplifier is used only in the Models 210A-04 and 210A-05 Discriminators. The amplifier, in conjunction with a DEV switch on the discriminator front panel, provides the discriminator with positive and negative sense capabilities. With the DEV switch in the (-) position, the amplifier is bypassed and normal negative sense is used. In the (+) position of the DEV switch, the signal is routed through the amplifier and inverted. This inverts the discriminator output thereby creating a positive sense discriminator.

The inverting amplifier obtains extreme stability by use of two differential amplifier stages (7Q901 thru 7Q904) and a complementary emitter-follower output stage (7Q905 and 7Q906). The amplifier has unity gain and is DC coupled throughout.

### 4.3.8 Output Filter and Power Amplifier

The output filter consists of a high-gain power amplifier and chopper amplifier for DC stabilization connected in the configuration of a three-complex-pole analog low-pass Rauch[1] filter which contributes 18 Db/octave to the total rolloff. The input signal to the output amplifier is the output of the loop amplifier or inverting amplifier having a signal range of ±3.0 volts corresponding to full bandwidth. The output signal at the feedback reference point (pin 10 of connector 1J3) is ±1 volt, filtered, at bandedges; the gain to this point is minus one-third. The amplifier full-scale output voltage is ±1 volt to ±10 volts depending upon the setting of the BANDEDGE VOLTS control. Frequency-determining components for the Rauch filter are contained in the Model 210C output filter; values are switched in the Model 210C-01 Output Filter to provide either the constant-delay or constant-amplitude response. The Model 210C-02 Output Filter contains only the components which provide constant-amplitude response and is identical to the Model 210C-01 Output Filter when the 210C-01 front panel switch is in the AMPLITUDE position. The Model 210C-03 Output Filter contains only the components which provide constant-delay response and is identical to the Model 210C-01 Output Filter when the 210C-01 front panel switch is in the DELAY position. A seven-pole passive filter is contained in Models 210C-04 and 210C-05 Output Filters to provide 42 Db/octave rolloff. The Models 210C-06 and 210C-07 Output Filters are used only in time-correlated systems. The Model 210C-06 Output Filter contains a three-pole filter which provides an 18 Db/octave rolloff. The Model 210C-07 Output Filter contains a two-pole filter which also provides an 18 Db/octave rolloff.

For applications where steep rolloff at frequencies below 220 CPS is desired, for example where the deviation ratio is as low as 2, two output filters are available. The Model 210C-08 Output Filter is a constant-delay filter with a characteristic essentially that of the sixth-order maximally flat envelope delay (Bessel) response. The data response of the discriminator is down 3 Db at the cutoff frequency, 14 Db at two times the cutoff frequency, and 30 Db at three times the cutoff frequency. The asymptotic slope is 36 Db per octave. The Model 210C-09 Output Filter is a constant-amplitude filter with a characteristic essentially that of the fifth-order maximally flat amplitude (Butterworth) response. The data response of the discriminator is down 0.5 Db at the cutoff frequency, 18 Db at two times the cutoff frequency, and 40 Db at three times the cutoff frequency. The asymptotic slope is 30 Db per octave.

Two additional Model 210C Output Filters (210C-11 and 210C-21) are designed specifically for use with the Models 210B-11 and 210B-21 Channel Selectors respectively. The Model 210C-11, designed for use with the Model 210B-11 Wideband FM Channel Selector, contains a front-panel switch for selection of one of six cutoff frequencies: 20, 10, 5, 2.5, 1.25, or 0.625 Kc. It is a constant-delay filter with a characteristic essentially that of the third-order maximally flat envelope delay (Bessel) response. The data response of the discriminator is down 3 Db at the selected cutoff frequency, 10 Db at two times the cutoff frequency, and 25 Db at four times the cutoff frequency. The asymptotic slope is 18 Db per octave. The Model 210C-21

---

[1] M. H. Nichols, L. L. Rauch, "Radio Telemetry" Second Edition, Appendix 8.

is designed for use with the Model 210B-21 Switchable-Bandwidth Channel Selector. The front panel contains a four-position switch for selection of the narrowband or wideband cutoff frequency and constant-amplitude or constant-delay response characteristic. The constant-amplitude response characteristic is the same as that of the Model 210C-01 in the "Amplitude" switch position. The constant-delay response characteristic is the same as that of the Model 210C-01 in the "Delay" switch position.

The output amplifier consists of transistors 2Q601 through 2Q614 connected as a high-gain DC amplifier. The power output stage is a complementary emitter-follower consisting of transistors 2Q609 and 2Q614; these transistors are mounted on a heat sink which is part of the secondary card assembly. Power for the power amplifier is obtained from the plus and minus 17.5-volt regulated supplies in the Model 223B Power Supply. Resistors 2R619, 2R626, 2R633, and 2R647 are power types and provide short-circuit current limiting and thermal protection for the transistors. The driver stage is a complementary amplifier consisting of transistors 2Q607, 2Q608, 2Q612, and 2Q613. Unity-gain inverse-feedback is employed around the power output and driver stages.

Dual frequency inputs to the gain stages of the output amplifier are provided by a cross-over network consisting of 2C604 and 2R627; the cross-over frequency is 50 CPS. High frequencies are coupled directly into the output amplifier through 2C604; low frequencies and DC are coupled from the output of the chopper-amplifier through 2R627. The low-frequency open loop gain of the output amplifier is 10,000.

The excellent DC stability (versus operating time, supply variations, and temperature changes) of the output amplifier is accomplished by the addition of an open loop gain of 1000 in the chopper amplifier ahead of the output amplifier. The output amplifier gain stages are an emitter-follower (2Q601), two cascaded common-emitter amplifiers (2Q602 and 2Q603), another emitter-follower (2Q604), and a common-emitter amplifier (2Q605) using a high-impedance load (2Q610 connected as a constant-current generator). A complementary emitter-follower (2Q606 and 2Q611) is used for isolation between the gain stages and the power-amplifier drivers.

Diodes 2CR605 through 2CR608 are biased to conduct when the amplifier output exceeds ±12.5 volts. When these diodes conduct, they feed the amplifier output back to the input in inverse phase and limit the amplifier output to ±12.5 volts while maintaining closed-loop operation of both the output amplifier and chopper amplifier. Since circuitry in the loop cannot be saturated and coupling capacitors cannot be charged by an overload input signal, the recovery time is fast.

### 4.3.9 Chopper Amplifier

The input to the chopper amplifier is the DC error signal obtained from the feedback network of the Rauch output filter. AC components of this signal are filtered out by an RC network (2R620 and 2C613). The DC gain of 1000 of the chopper amplifier, connected ahead of the output amplifier, has the effect of dividing the equivalent drift at the input of the output amplifier by 1000. Since the input stage of the output amplifier (2Q601) is a special low-drift silicon transistor, extremely stable DC operation is provided.

The DC gain of the chopper amplifier is accomplished by modulating the DC error signal by means of a shunt-type chopper. The chopper is a silicon transistor (2Q701) designed specifically as a chopper. This type of chopper has the advantages of very low DC drift, long-term stability, infinite life, and high frequency operation. The output of the chopper is a 6-Kc square wave whose amplitude is proportional to the DC error signal of the output amplifier, and whose phase is either zero or 180 degrees depending on the polarity of the error signal. The high chopping frequency in conjunction with RC network 2R620 and 2C613 provides very low intermodulation distortion of discriminator output signals harmonically related to the chopper frequency.

The AC error signal is amplified by a high-gain AC-coupled amplifier consisting of transistors 2Q702 through 2Q706. Transistors 2Q702 and 2Q703 are connected as a high-input-impedance boot-strapped follower to provide isolation between the chopper and amplifier circuits. Further amplification of the signal is provided by 2Q704 and 2Q705. Transistor 2Q706 is used as the emitter-follower output stage of the amplifier.

The amplified AC error signal is converted back to a DC signal by a complementary synchronous detector consisting of transistors 2Q708 and 2Q709. The AC component of the detected signal is filtered by an RC network consisting of resistor 2R709 and bi-polar capacitors 2C706-2C712. The 6-Kc signals driving both the chopper and synchronous detector are the outputs of an astable (free-running) multivibrator consisting of transistors 2Q710 and 2Q711. The output signals at the collectors of the multivibrator transistors are inverted square waves of magnitude 5 volts peak about ground. Diodes 2CR705 and 2CR706 ensure self-starting of the multivibrator. Adjustment of the output amplifier DC offset, contributed by the approximately 1-millivolt offset of the chopper transistor, is accomplished by feedback of a properly phased signal to the input of the AC-coupled chopper amplifier; the amplitude and phase of this signal are controlled by the output amplifier zero control, potentiometer 2R732.

### 4.3.10 PERCENT BANDEDGE Meter

The PERCENT BANDEDGE meter and its series multiplier resistor 1R214 are connected at the input of the voltage-controlled oscillator. The meter has a center balance movement and, with the multiplier resistor, a sensitivity of

±3.0 volts for full-scale deflection. The meter scale is calibrated to ±100 percent from center. Since ±3.0 volts at the VCO input corresponds to bandedge frequency deviation, the meter indicates percent of bandedge frequency deviation regardless of the position of the BANDEDGE VOLTS control.

### 4.3.11 Signal Loss Circuit

When the subcarrier amplitude falls below a predetermined threshold level for a significant period of time, the signal loss circuit energizes the SIGNAL LOSS lamp and clamps the discriminator output to ground. The output of the second limiter stage (first gain stage) is coupled by 1C301 to a feedback amplifier consisting of transistors 1Q301 and 1Q302. The amplifier output is converted to a DC signal whose amplitude is proportional to signal amplitude by a full-wave voltage-doubling rectifier consisting of diodes 1CR301 and 1CR302 and capacitors 1C302 and 1C303.

Transistors 1Q303 and 1Q304 comprise a differential voltage comparator; when the base of 1Q303 is more negative than the base of 1Q304, transistor 1Q303 is conducting and transistor 1Q304 is cutoff, and the SIGNAL LOSS lamp is on. When the discriminator input amplitude is zero, 1Q303 is biased on (negative) by the voltages determined by resistors 1R313, 1R314, 1R321 and 1R322. As the discriminator input amplitude increases, the rectified output of the feedback amplifier is an increasing positive voltage. At the input signal zero-signal-threshold level this positive voltage exceeds the negative bias, the voltage detector reverses states, and 1Q304 conducts. The zero-signal-threshold level is set by adjusting the gain of the feedback amplifier by means of variable resistor 1R319 in its feedback network.

The voltage detector output at the collector of transistor 1Q304 is direct-coupled to the base of transistor 1Q305. Below zero-signal threshold, transistor 1Q305 conducts to saturation, clamping the loop amplifier output, and consequently the data output, to ground. Transistor 1Q305 is emitter-coupled to the zero-signal lamp driver (1Q306) driving it to saturation and energizing the SIGNAL LOSS neon lamp (4DS301), connected in its collector circuit, at input-signal levels below zero-signal threshold. The negative 100-volt power required to operate the loss-of-signal and loss-of-lock neon lamps is supplied by the Model 223B Power Supply.

The rectifier at the output of the feedback amplifier is driven by an emitter-follower (1Q302) with low output impedance; this provides fast charging of the rectifier filter capacitors. The discharge time through the high resistance of 1R312 is slow, thus providing fast release and slow attack action of the output clamp so it will not operate on input-signal flutter.

### 4.3.12 Loss-of-Lock Circuit

The phase relationships between the limiter and VCO signals during normal operation of the phase-locked-loop detector are shown in Figure 4-3. Limiter output signal A (waveform 1) is coupled to the loss-of-lock circuit through follower-isolator transistor 1Q110. VCO output signal B (waveform 2) is coupled to the loss-of-lock circuit by isolator-shaper transistor 1Q201, which inverts the signal phasing it with VCO output signal A (waveform 1). The limiter and VCO input signals to the loss-of-lock circuit are shown in Figure 4-2, waveforms 1 and 2. The VCO signal is differentiated by capacitor 1C201 and added to the limiter signal by a resistive matrix consisting of 1R115, 1R137, and 1R134. The output signal of the resistive matrix is applied to the anode of diode 1CR304 which serves as a coincidence gate (see waveform 3, Figure 4-3).

The operation of the phase-locked-loop is normal when phase error between the limiter and VCO signals is less than plus or minus 90 degrees. Since the cathode of diode 1CR304 is returned to ground through 1CR305 and the base-emitter junction of transistor 1Q307, diode 1CR304 cannot conduct unless its anode is positive with respect to ground, which does not occur during normal operation (see waveform 3). When the phase error exceeds plus or minus 90 degrees, however, the phase-locked-loop goes into loss-of-lock operation and diode 1CR304 conducts (see waveform 4).

When loss-of-lock operation occurs, the positive pulse transmitted by diode 1CR304 is applied to the base of transistor 1Q307. Transistors 1Q307 and 1Q308 comprise a combination monostable (one-shot) multivibrator and neon-lamp driver. Transistor 1Q307 is normally conducting and transistor 1Q308 is cut off. The pulse transmitted to the base of 1Q307 triggers the multivibrator; the output pulse at the collector of 1Q308 energizes the LOCK LOSS neon lamp (4DS302) for a duration of 500 milliseconds (see waveform 5). The expanded period of illumination is necessary so that occasional loss-of-lock operation can be observed when it occurs at a slow rate during operation of low-frequency subcarrier channels. The SIGNAL LOSS and LOCK LOSS lamps are interlocked by means of 1R315 so that they cannot be illuminated simultaneously, giving a false loss-of-lock indication upon loss of signal.

### 4.3.13 Delay Network

The delay network is necessary to delay the tape-speed error signal applied to the VCO an amount equal to the time delay of the bandpass input filter. DC tape-speed error signals are coupled to the tape-speed-compensation input of the VCO through resistors 1R430 and 1R432 located in the discriminator chassis. The sensitivity (amplitude) of the VCO tape-speed-compensation input is adjusted at the factory by means of 1R431 which is in parallel with 1R432. Because the DC error signal is not transmitted to the VCO by active elements, the delay network does not contribute drift instability to the discriminator circuitry.

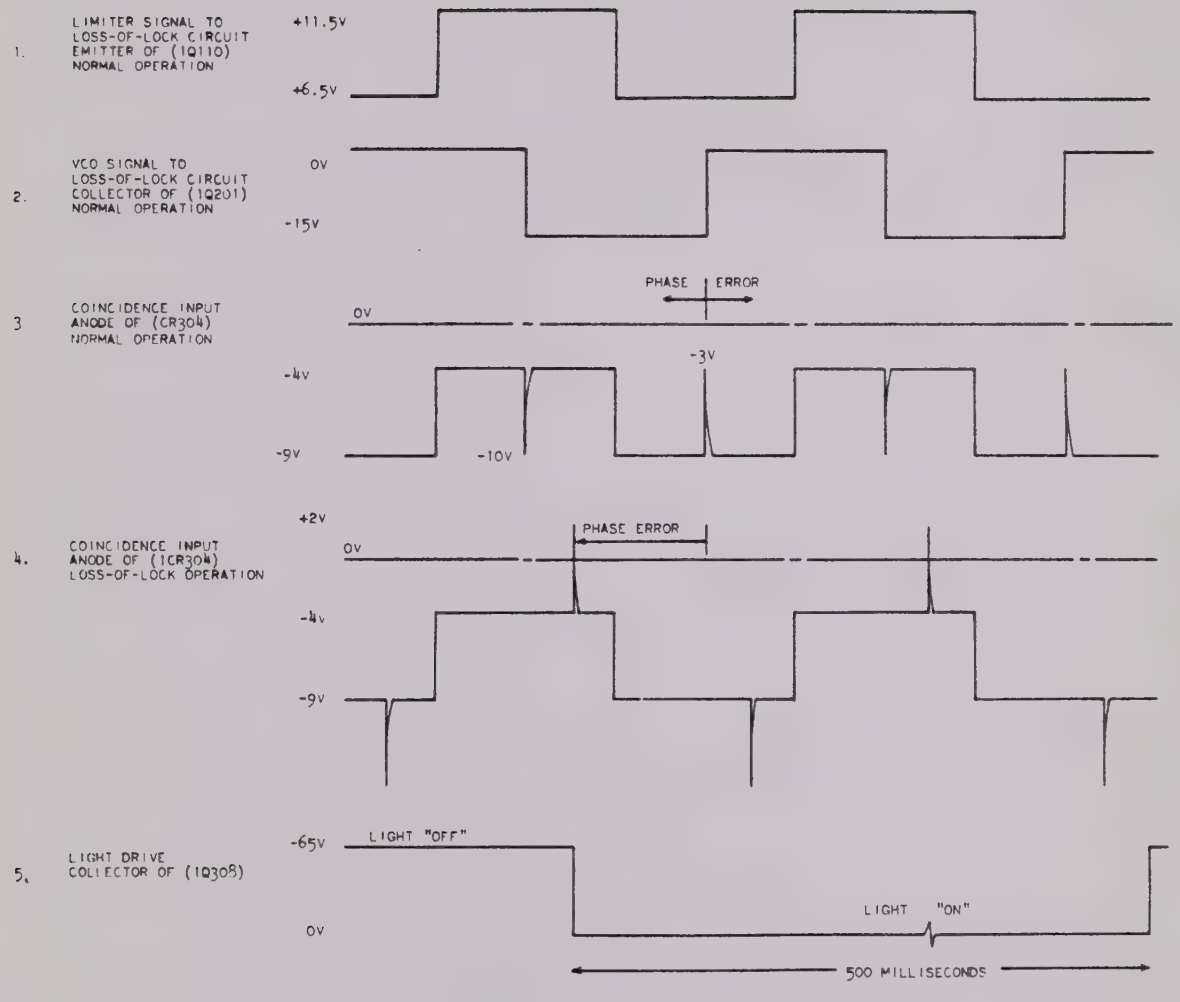


Figure 4-3. Idealized Waveforms, Model 210 Subcarrier Discriminator Loss-of-Lock Circuit

The AC tape error signal is coupled to the TSC input of the VCO through an inverting feedback amplifier and bi-polar capacitors (5C407 and 5C408). The capacitors, resistors (1R430 and 1R432), and the amplifier form an all-pass network for introducing delay without amplitude distortion.

The inverting amplifier consists of transistors 5Q403 and 5Q404 connected as an operational amplifier. All amplifier components and capacitors 5C407/ 5C408 are located in the Model 210B Channel Selector. The time delay of the delay network is set at the factory to be equal to the delay of the BPIF contained in the same channel selector, by adjusting the amplifier gain with resistor 5R411 in its feedback network. Because these delays are adjusted in permanently matched pairs, tape-speed compensation can be maintained with any channel selector installed in any discriminator and without the necessity of field adjustment of individual channels.

### 4.3.14 Reference Channel Selector

A Model 210T Reference Channel Selector is used in conjunction with a Model 210A Discriminator to form a reference discriminator. The reference discriminator is used in tape-speed compensation systems as shown in Figure 4-4. The reference discriminator introduces voltage levels to the data discriminators to correct effects of tape-speed variations during playback of the recorded FM multiplex. (Refer to Paragraph 4.3.16 for tape-speed-compensation system operation.) The Model 210T-01 or 210T-06 Reference Channel Selectors, are used in proportional bandwidth systems, and are identical to a combination of Model 210B-01 Channel Selector and a Model 210C-02 Output Filter with the following exceptions:

a. Channel selector and output filter extruded-aluminum chassis are permanently attached to each other. Output filter frequency-determining components are not independently variable but are fixed for a given reference frequency.

b. All delay network components are deleted.

c. The front-panel TSC ON-OFF switch (5SW601) disconnects the input of the discriminator output amplifier from the phase-locked-loop detector and connects it to ground.

d. Delay (D) and Gain (G) adjustments of the reference discriminator are accomplished by means of potentiometers 5R654 and 5R655, located on the reference channel selector front panel, which, being connected in the feedback network of the Rauch output filter, vary its phase-shift and gain.

The Models 210T-02 and 210T-07 are identical to the Model 210T-01 with the exception that filter capacitors have been removed from the output filter circuit of the Model 210T-02. The modification eliminates virtually all delay in the output filter circuit. The Model 210T-02 and 210T-07 are designed for

operation with the Model 258 Frequency Detranslator in detranslating tape-speed-compensation systems. For additional information pertinent to detranslation tape-speed-compensation, refer to Model 258 Instruction Manual. The Models 210T-03 and 210T-08 Reference Channel Selectors are identical to the Models 210T-01 and 210T-06 respectively except for individual component values. The Models 210T-03 and 210T-08 are designed for use in a constant-bandwidth system in which a Model 259 Group Frequency Detranslator is used.

The primary difference between the Models 210T-01, 210T-02, and 210T-03 Reference Channel Selectors and the Models 210T-06, 210T-07, and 210T-08 Reference Channel Selectors is that both input and output signals for the filters on the 210T-06, 210T-07, and 210T-08 are coupled through emitter-follower circuits which are of modular design and mounted to the card assembly. Subcarrier input signals for the Models 210T-01, 210T-02, and 210T-03 are directly coupled to the BPIF and the filter output is coupled through an emitter-follower circuit that is assembled on the Channel Selector printed-circuit cards.

The detailed theory of operation for the Model 210T is identical to the combination of Model 210B-01 Channel Selector and Model 210C-02 Output Filter. Refer to Paragraphs 4.3.1 and 4.3.8 for detailed theory of operation.

### 4.3.15 Power Supply Regulators

All circuitry of the discriminator, other than the power output stages of the output amplifier, the VCO and heater, and the SIGNAL LOSS and LOCK LOSS neon lamps, is supplied by plus and minus 15-volt highly regulated power. This power is furnished by two power-supply regulators, one for each supply polarity, which receive their power from the plus and minus 17.5-volt regulated supplies of the Model 223B Power Supply.

The plus and minus 15-volt supply regulators are similar except for the use of complementary transistors; the theory of operation of the plus 15-volt supply regulator is discussed in the following paragraph.

Transistor 2Q807 is used as a series regulating element (controlled variable resistor in series with the load). Transistor 2Q808 is Darlington-connected to the series regulating transistor to reduce the current drive required. The series regulator is controlled by a differential amplifier, which compares the regulated supply voltage to that of a precision temperature-compensated zener reference diode 2CR804. The high load impedance of the differential amplifier provided by constant current generator 2Q812 provides gain in the regulator loop. The series regulator is thus controlled to provide power whose voltage is related to the reference diode voltage and is not affected by drift and ripple of the regulated input supply. Potentiometer 2R818 is provided in the voltage comparator so that the regulated supply can be adjusted for exactly 15 volts output. During normal operation of the supply regulator, transistor 2Q809 does not conduct.

When the output current of the regulator supply exceeds approximately 150 percent of its normal value, the voltage drop across series resistor 2R814 causes transistor 2Q809 to conduct and turn on the series regulator. The output current of the supply regulator is limited to 150% or less of its normal load current, thus providing short-circuit protection to itself and continuous operation of other discriminators in a rack adapter connected to the same Model 223B Power Supply.

4.3.16 Tape-Speed-Compensation System

Many formats require that FM multiplex signals be recorded on tape recorders for future application to subcarrier discriminators. Variations of tape speed (referred to as wow and flutter) during recording or reproduction cause frequency modulation of all channels of the FM multiplex. Unless the effects of tape-speed variations are corrected, wow and flutter modulations result in discriminator output signals that are indistinguishable from data. The tape-speed-compensation system as shown in Figure 4-4 has a guaranteed wow-and-flutter improvement ratio of 30 Db for tape-speed variations as large as ±3 percent and for signals anywhere in the channel.

When tape-speed compensation is required, a crystal-controlled reference signal is mixed with the data channels and is recorded as part of the FM multiplex. Although the reference signal may be of any frequency that does not interfere with adjacent channel frequencies, systems designed to IRIG specifications use either a 25 Kc ±0.01%, a 50 Kc ±0.01% or a 100 Kc ±0.01% compensation signal for 15, 30, and 60 inches-per-second tape speed. As long as the compensation signal frequency is maintained without deviation, (either on tape record or tape readout) the data channel frequencies can be assumed to contain data unaffected by the record or readout process. However, if the tape recorder varies in speed during either process, the compensation signal will change frequency an amount equal to the variation. At the same time data channel frequencies will be affected by the same relative amount. The purpose of the tape-speed-compensation system is to detect the erroneous modulation of the compensation frequency and to use the resultant voltage as an error-compensation signal.

In the tape-speed-compensation system, the FM multiplex output of the tape recorder system is fed to a 210 Reference Discriminator. This discriminator is identical to the data discriminator except that its channel selector (Model 210T) is tuned to the reference frequency. Tape speed changes will result in modulation of the reference frequency. The reference discriminator will detect this signal and supply an output voltage corresponding to the FM modulation. This output voltage is applied to the tape-speed-compensation inputs of all data discriminators. The tape-speed-compensation signal is of the proper magnitude and polarity to cancel tape-speed errors that would otherwise be superimposed on the individual data channels. Thus, the compensation signal is effective throughout the intelligence passband of the data subcarrier channel and is independent of the position of the subcarrier within the band.

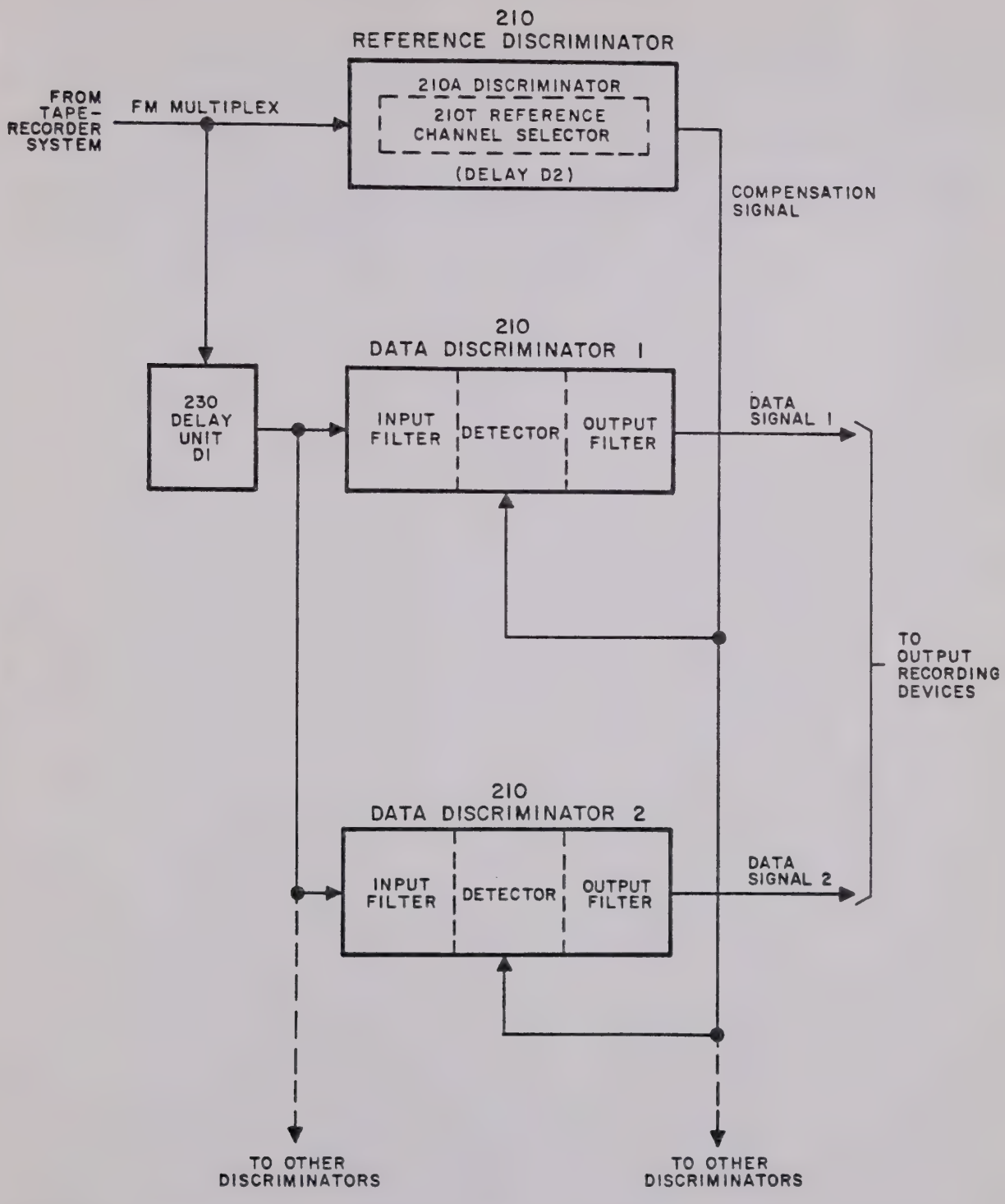


NOTE:
EMR DRAWING CONTROL NO. 210-006.

Figure 4-4. Block Diagram, Tape-Speed-Compensation System

Because the compensation signal must tune the data discriminators at the exact time that the tape-speed error arrives at the detector of each discriminator, all delays in the reference signal and data signal paths must be taken into consideration. Circuitry in the reference discriminator presents a fairly large delay (designated D2 in Figure 4-4) between the input reference signal and the detected compensation signal. Therefore, a delay of equal length is presented to all data channels by a 230 Delay Unit (D1) prior to their application to the data-discriminator inputs.

# SECTION 5

# MAINTENANCE

## 5.1 GENERAL

This section contains information to aid in troubleshooting and repair of the Model 210 Discriminator. Included is a list of recommended test equipment, procedures for individual circuit tests, test point waveforms, filter characteristic curves, transistor voltage measurements, schematics and parts location diagrams. If in any tests it is necessary to extend units from the rack adapter, the Model 222B Test Adapter should be used. For additional information pertinent to the test adapter, refer to the Model 222A Rack Adapter Instruction Manual.

If a malfunction occurs, the following general method of troubleshooting, using supplementary information in this section, is suggested.

a. Perform visual inspection (Paragraph 5.2).

b. Perform circuit tests to aid in isolating trouble to a particular circuit (Paragraph 5.3).

c. Make transistor voltage measurements (Paragraph 5.6).

d. Refer to Section 6, Replaceable Parts List, for description of component.

e. Check discriminator calibration (Paragraph 5.4).

## 5.2 VISUAL INSPECTION

When a malfunction occurs, the following visual inspection should be performed before making any circuit checks.

a. Inspect all connectors and controls for sign of damage, looseness or excessive wear.

b. Check for loose or missing hardware.

c. Inspect wiring for loose connection.

d. Inspect printed-circuit cards and components for signs of damage or overheating.

## 5.3 CIRCUIT PERFORMANCE TESTS

A malfunction can usually be isolated to a particular circuit by performing the circuit tests described in Paragraphs 5.3.2 through 5.3.12. When performing these tests, operate the discriminator in accordance with the conditions and procedures outlined in Section 3, Installation and Operation.

The adjustments and associated test points located at the top of the discriminator (Figure 5-1 and Table 5-1) are provided to maintain discriminator characteristics over long-term operation and to provide field adjustment of precision circuits after change of components. The following performance tests include the procedures for adjusting these controls.

Unless otherwise specified, all performance tests are performed with the Model 210 Discriminator installed in a Model 222A Rack Adapter (or extended by means of a Model 222B Test Adapter) and operating in conjunction with a Model 223B Power Supply. The discriminator is used with a Model 210B Channel Selector and Model 210C Output Filter for an IRIG channel as listed in Table 2-1. The input subcarrier frequency obtained from the audio oscillator or switchable VCO is at band center and 1.0 volt RMS in amplitude (the SUBCARRIER AMPLITUDE meter on the Model 223B Power Supply can be used for this purpose). The BANDEDGE VOLTS control is at 10 volts (maximum clockwise).

### 5.3.1 Test Equipment Required

The following listed test equipment or the equivalent is recommended for tests outlined in this section.

| Test Equipment | Manufacturer | Type |
|---|---|---|
| Switchable Voltage-Controlled Oscillator | | |
| Test Oscillator | Hewlett-Packard | 204B or 200CD |
| Test Oscillator | Hewlett-Packard | 202A |
| Events Counter | Berkeley | 7360 |
| AC Voltmeter | Hewlett-Packard | 400L |
| DC Multimeter | Simpson | 260 |
| Precision D.C. Voltmeter | Fluke | 801 |
| Oscilloscope with dual-trace and high-gain plug-in modules | Tektronix | 545A |

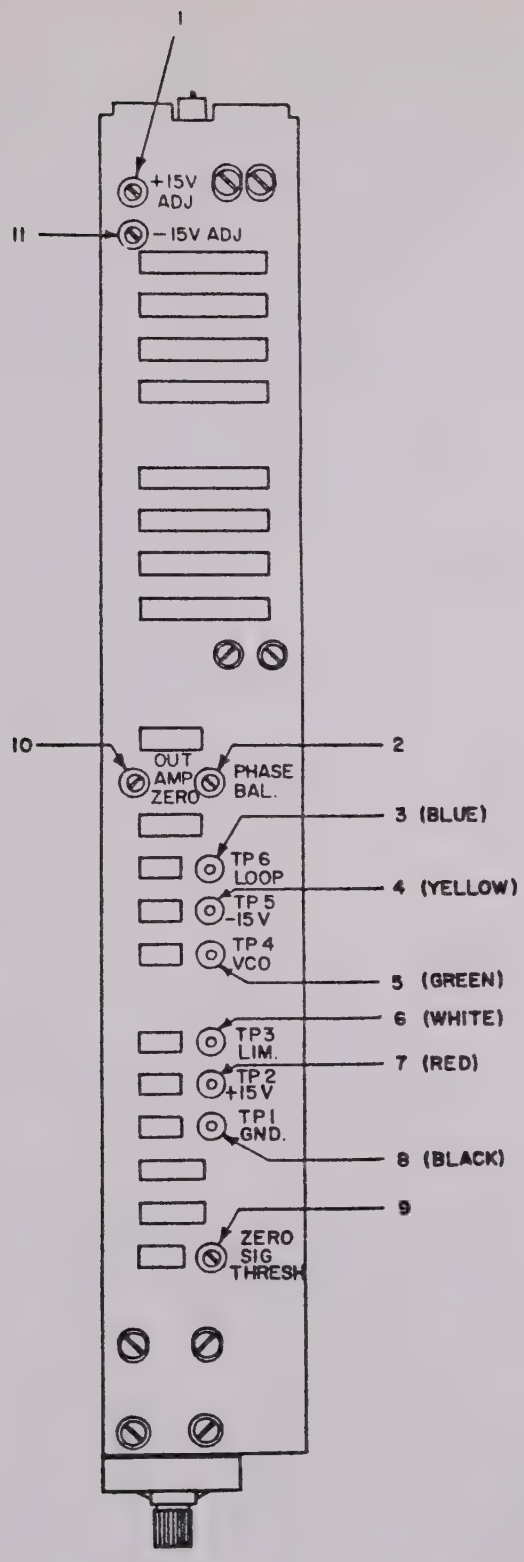


Figure 5-1. Location of Test Points and Adjustments, 210A Discriminator Chassis (Ref. Table 5-1)

Table 5-1. Function of Test Points and Adjustments, 210A Discriminator Chassis (Ref. Figure 5-1)

| Ref. No. | Name | Nomen-clature | Type | Function |
|---|---|---|---|---|
| 1 | +15V ADJ | 2R818 | 250-ohm potentiometer | Used to adjust +15V regulator. |
| 2 | PHASE BAL. | 1R204 | 500-ohm potentiometer | Used to adjust phase detector. |
| 3 | TP6 LOOP | TP6 | Blue TP jack | Used to monitor loop output. |
| 4 | TP5 -15V | TP5 | Yellow TP jack | Used to monitor -15V regulator. |
| 5 | TP4 VCO | TP4 | Green TP jack | Used to monitor VCO. |
| 6 | TP3 LIM. | TP3 | White TP jack | Used to monitor limiter. |
| 7 | TP2 +15V | TP2 | Red TP jack | Used to monitor +15V regulator. |
| 8 | TP1 GND | TP1 | Black TP jack | Used as ground reference for testing. |
| 9 | ZERO SIG THRESH | 1R319 | 50K potentiometer | Used to adjust minimum input level. |
| 10 | OUT AMP ZERO | 2R732 | 500-ohm potentiometer | Used to zero output amplifier. |
| 11 | -15V ADJ | 2R807 | 250-ohm potentiometer | Used to adjust -15V regulator. |

### 5.3.2 Power Supply Regulators

Using the oscilloscope and precision DC voltmeter, monitor the plus 15-volt and minus 15-volt supply voltages at test points TP-2 (+15V, red) and TP-5 (-15V, yellow). The DC voltages at these test points should be 15 volts plus or minus 75 millivolts. If the regulated 15-volt supply voltages are not within these limits, adjust them to 15 volts plus or minus 25 millivolts by means of the +15V ADJ and -15V ADJ controls. The 120-cycle-per-second ripple observed at either 15-volt regulated supply test point should not exceed 5 millivolts peak-to-peak during normal operation.

Because of the current-limiting feature of the supply regulators, low regulated supply voltage may be caused by an overload in the discriminator circuitry or by faulty components in the supply regulators. The normal load currents of the discriminator are as follows (measure currents with the DC multimeter with the discriminator operating at band center and with no load):

| Supply | Measure Current to pin ( ) of 1P1 | Nominal Current |
|---|---|---|
| +17.5 volts | B | 150 Ma |
| -17.5 volts | V | 150 Ma |
| -26 volts | W | Initial: 125 Ma; after 15-minute warmup: 70 Ma |
| -105 volts | A | 1 to 2 Ma |

### 5.3.3 Bandpass Input Filter Gain and Frequency Characteristics

The attenuation characteristics of the bandpass input filter can be measured by maintaining a constant subcarrier input amplitude at the subcarrier input pin L of rear connector 1P1 and measuring the BPIF output amplitude with the AC voltmeter at the INPUT monitor jack (4J101) or pin F of 1P1. The insertion loss of the BPIF at band center should be 6 Db ±0.3 Db. The gain of the BPIF should be down approximately 2.5 Db at either bandedge compared to the maximum gain in the band. The gain should be down 18 Db at ±20 percent for ±7.5 percent deviation units and down 18 Db at ±40 percent deviation for ±15 percent units. Typical attenuation cnaracteristic curves for BPIF are shown in Figure 5-2.

### 5.3.4 Limiter Gain and Frequency Characteristics

The limiter gain and frequency range can be checked by inserting a signal from the test oscillator into the INPUT monitor jack (4J101) or pin F of 1P1 with the Model 210B Channel Selector and 210C Output Filter plug-in modules removed from the discriminator chassis. A jumper must be inserted from pin M of 1J2 to pin N of 1J2 to connect limiter test-point TP-3 to limiter output. Monitor the limiter output at TP-3

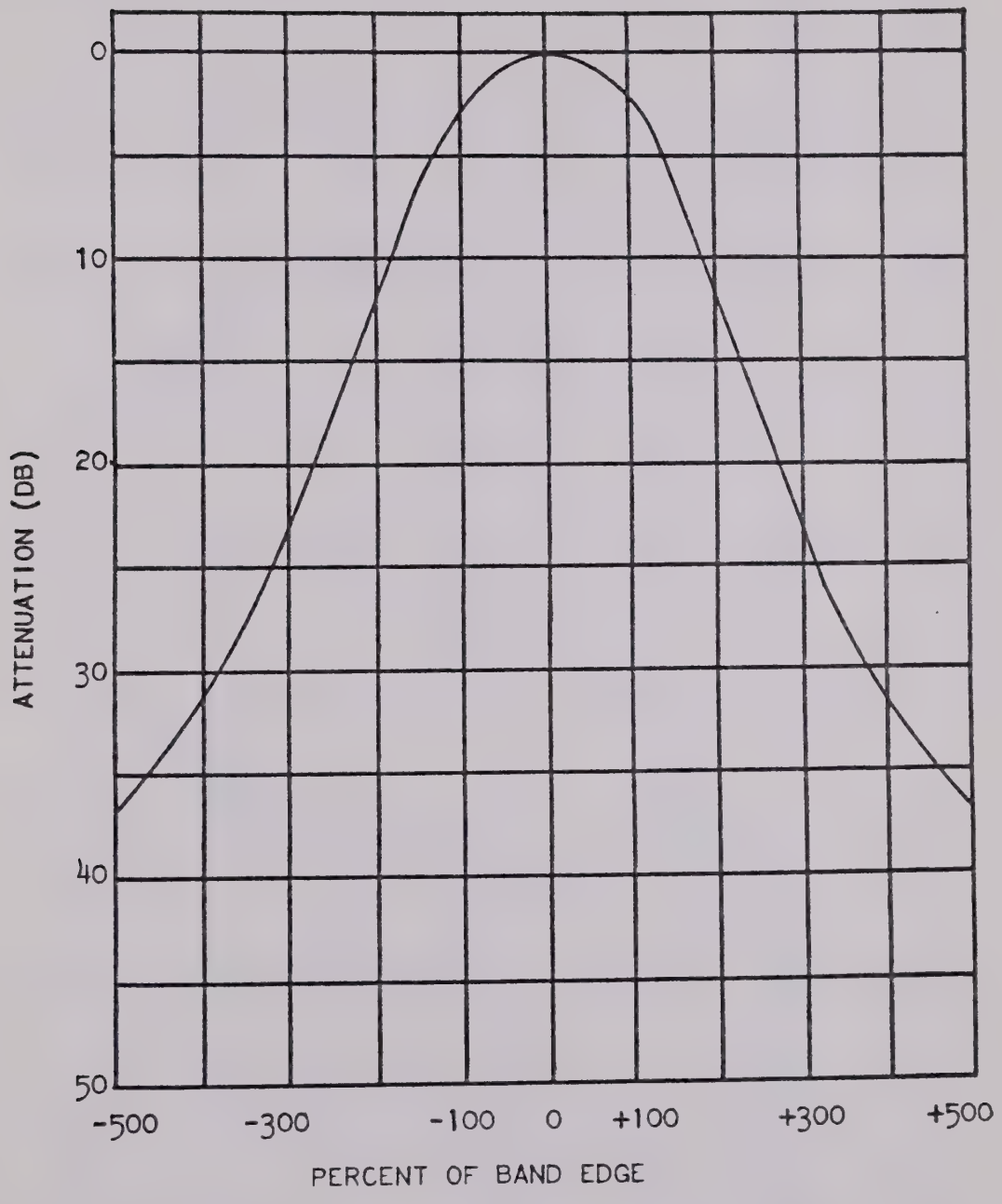


Figure 5-2. Typical Bandpass Input Filter Response
(Models 210B-02, 210B-04, and 210T-01)

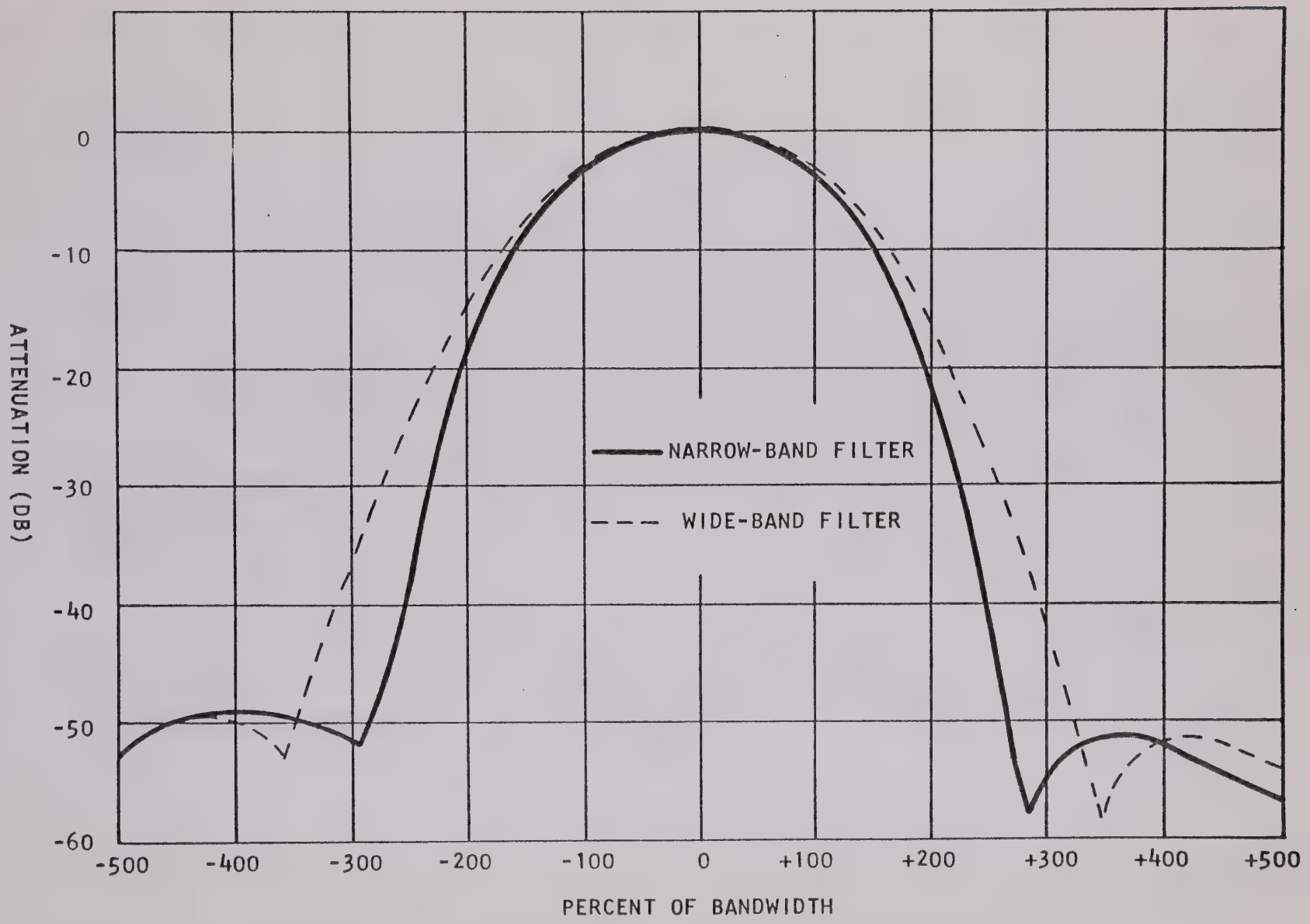


Figure 5-2 (Sheet 2 of 2). Typical Bandpass Input Filter Response Curves (Models 210B-06, 210B-07, 210B-08, and 210T-06)

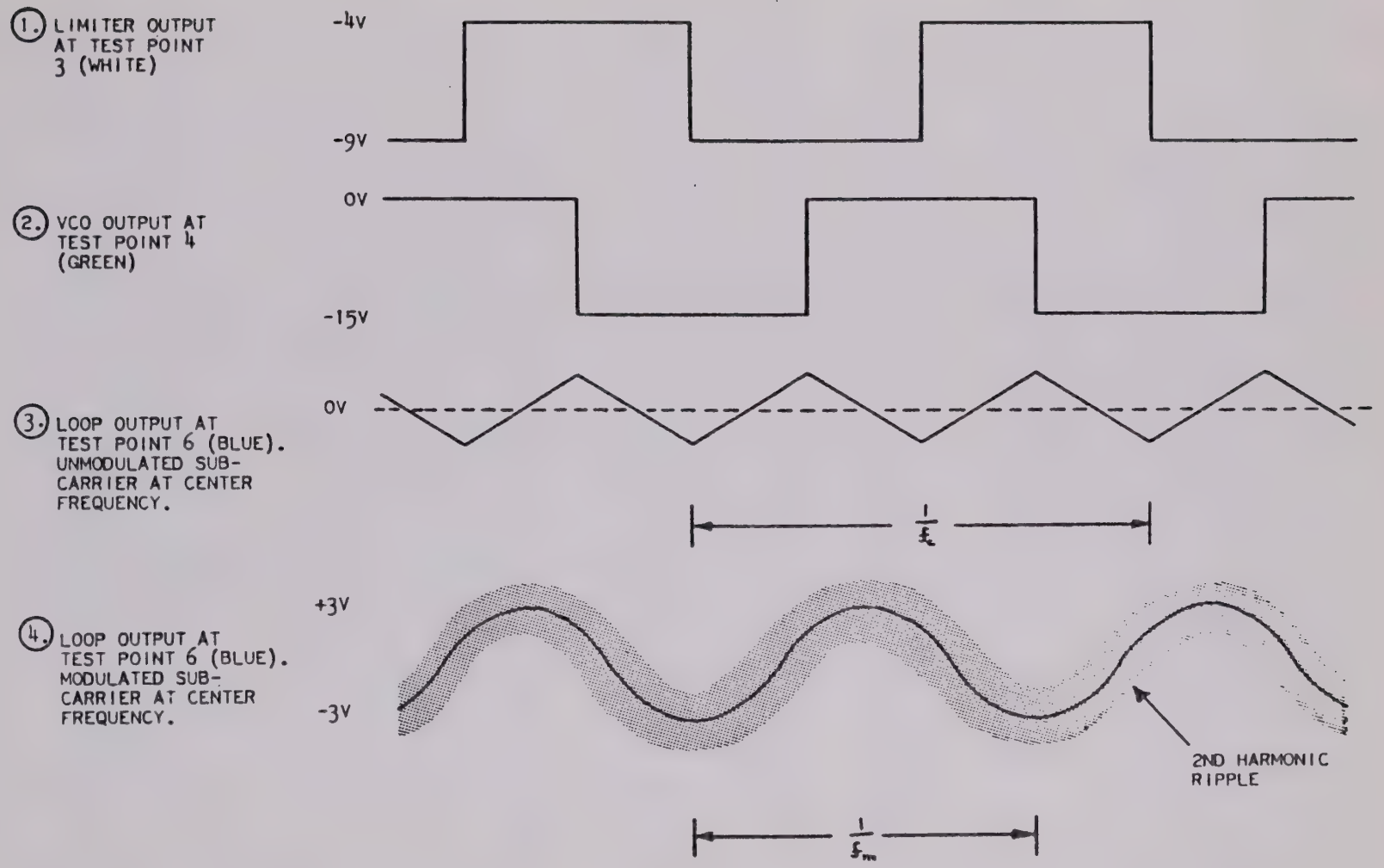


Figure 5-3. Test Point Waveforms, 210A Discriminator Chassis

with the oscilloscope and AC voltmeter. Adjust the input signal amplitude so that the limiter output signal is a maximum-amplitude sine wave (no limiting action; approximately 1 volt RMS). The limiter gain should be approximately 2000 and the minus 3 Db frequencies should be approximately 50 CPS and 500 Kc. Limiting action can be checked by increasing the input signal amplitude from 5 millivolts RMS to 5 volts RMS; the limiter output signal should vary from a clipped sine wave to a square wave of approximately 5 volts peak-to-peak amplitude (see waveform 1, Figure 5-3).

### 5.3.5 Phase-Locked-Loop Detector

Proper operation of the phase-locked-loop detector can be ascertained by performing the following test.

With an unmodulated center-frequency input signal to the discriminator, the VCO should be operating at center frequencies. When the input signal is deviated to bandedges, the VCO should follow the input signal.

The limiter, VCO, and loop amplifier output voltages and waveforms, measured at test-points TP-3 (white), TP-4 (green), and TP-6 (blue), should be as shown in waveforms 1, 2, and 3 of Figure 5-3. The average DC voltage at the loop amplifier output test point, TP-6, should be zero with the input signal frequency at band center after adjustment of the BALANCE control on the front panel of the channel selector. The DC voltage at TP-6 should be +3.0 volts with the input signal frequency at the upper bandedge and -3.0 volts at the lower bandedge.

With an unmodulated center-frequency input signal to the discriminator, the limiter output signal monitored at TP-3, and the VCO output signal, monitored at TP-4, should be square waves displaced in phase by 90 degrees, as shown in waveforms 1 and 2 in Figure 5-3. The phase displacement can be measured accurately by using the dual-trace plug-in and calibrated delayed-sweep controls of the oscilloscope or the start and stop inputs of the events counter. With the BALANCE control adjusted for zero volt at TP-6, the phase displacement between the limiter and VCO voltage signals should be 90 ±2 degrees. If the phase displacement is not within these limits, adjust the PHASE BAL control. With the input signal frequency at bandedges, the phase displacement should be 90 ±4 degrees.

Apply a modulated input signal to the discriminator from the switchable VCO. The waveform at the loop amplifier output, TP-6, should be as shown in waveform 4 in Figure 5-3. The loop amplifier waveform is the modulation signal with superimposed ripple at the second harmonic of the subcarrier frequency. The second-harmonic ripple frequency is attenuated by the discriminator output filter to provide a distortionless data output signal.

Modulate the switchable VCO, bandedge-to-bandedge, with a square wave of approximately one-fifth the output filter cutoff frequency. The HP 202A Test Oscillator can be used as the modulation voltage source. The switch on the Model 210C-01 Output Filter front panel should be in the DELAY position. If a Model 210B-02 Channel Selector is used, the LOOP WIDTH switch should be in the 1 position. The LOCK LOSS lamp should not light and the discriminator output should be a square wave with limited rise time. When a Model 210B-02 or 210B-07 Channel Selector is used, with sinusoidal bandedge-to-bandedge modulation at frequencies equivalent to the modulation frequencies for deviation ratios of 5, 10, 25, and 100, the LOCK LOSS lamp should not light and the discriminator output signal should be an undistorted sine wave with the LOOP WIDTH switch in the corresponding positions. Since the phase-locked-loop detector is in essence a feedback system and cannot be operated open loop, it may be difficult to determine cause and effect for any malfunction within the loop.

### 5.3.6 Inverting Amplifier Gain and Frequency Response (Models 210A-04 and 210A-05 Discriminators only)

Proper operation of the inverting amplifier may be ascertained by performing the following test.

Disconnect the inverting amplifier input from terminal ES on the discriminator main card assembly. Monitor the output at terminal EW while applying an 8-volt peak-to-peak sine wave at a frequency of 10 Kc to the input terminal 7E905 from a 25-ohm source. The gain of the amplifier will be 1.000 ±0.01 and the output signal will have less than 0.3 percent harmonic distortion. The gain will be down 3 Db between 300 Kc and 400 Kc.

If the gain does not meet the above specified value, adjustment of the zero potentiometer will be required. The zero potentiometer (7R907) may be adjusted by removing the input to the amplifier from terminal ES and grounding it to terminal 7E902 on the inverting amplifier printed-circuit card. Adjust 7R907 so that the output voltage measured at terminal 7E904 is 0 volt ±5 millivolts.

### 5.3.7 VCO Oven Controller

Proper operation of the VCO oven controller can be ascertained by monitoring the supply current at pin W of rear connector 1P1. When the controller is operating properly, this current will be approximately 125 Ma at initial turn-on of the discriminator. The current should decrease to approximately 70 Ma after approximately 15 minutes operation; at this time the oven temperature should stabilize to approximately 65 degrees centigrade. If any of the special VCO oven controller components listed in Paragraph 5.7 are replaced, readjust the operating temperature by varying the value of 3R505. A thermocouple attached to the inner can of an assembled oven may be used for the temperature measurement.

### 5.3.8 Output Calibration and Linearity

With an unmodulated center-frequency input to the discriminator, adjust the BALANCE control for zero volt output. The discriminator output voltage should be -10.0 volts ±3 percent with the input signal frequency at upper bandedge and +10.0 volts ±3 percent at lower bandedge and the BANDEDGE VOLTS control at maximum (fully clockwise). With the BANDEDGE VOLTS control at minimum (fully counterclockwise), the discriminator output should be minus and plus 1.0 volt ±3 percent for upper and lower bandedge input frequencies. A calibrated BANDEDGE VOLTS dial is furnished for the Models 210A-02 and 210A-05 Discrminators.

The linearity of the discriminator output versus frequency can be checked by the calibration check outlined in Paragraph 5.4.

### 5.3.9 Output Filter, Power Amplifier, and Chopper Amplifier

The performance of the output filter can be measured by disconnecting the jumper connected between test pins ES and EW on the main printed-circuit card assembly and injecting a signal from the test oscillator to pin EW. The gain and frequency characteristics of the output filter can be measured at the OUTPUT monitor jack or pin J of 1P1. With the BANDEDGE VOLTS control at maximum, do not exceed an output voltage of 7.0 volts RMS or an input voltage of 2.33 volts RMS. At frequencies less than one fifth of the output-filter cutoff frequency, the gain of the output amplifier should be one-third with the BANDEDGE VOLTS control at minimum and 3-1/3 with the BANDEDGE VOLTS control at maximum. With this control at maximum, limiting diodes 2CR605 through 2CR608 cause the output voltage to be limited to within approximately minus 12.5 volts to plus 12.5 volts. Theoretical output filter characteristics for the Models 210C-01 through 210C-09 are shown in Figure 5-4.

The DC offset of the output amplifier can be set to zero by adjusting the OUT AMP ZERO control. To make this adjustment, adjust the BALANCE control for zero volt at the loop amplifier output, TP-6, with an unmodulated center-frequency input signal. Adjust the OUT AMP ZERO control for 0 ±10 millivolts DC at the discriminator output (OUTPUT monitor jack or pin J of 1P1). The precision DC voltmeter should be used for these voltage measurements.

The output amplifier is a feedback amplifier with additional gain in the loop provided at DC and low frequencies by the chopper amplifier. Because of the extremely high overall gain, the amplifier cannot be operated open loop and troubleshooting may be difficult. When the output filter and power amplifier circuit is operating properly, the voltage at the negative connection of 2C706 should be 0 ±100 millivolts DC (use the precision DC voltmeter for this measurement). If this voltage exceeds its limits, the operation of the output filter and power amplifier may be checked without the chopper amplifier by connecting

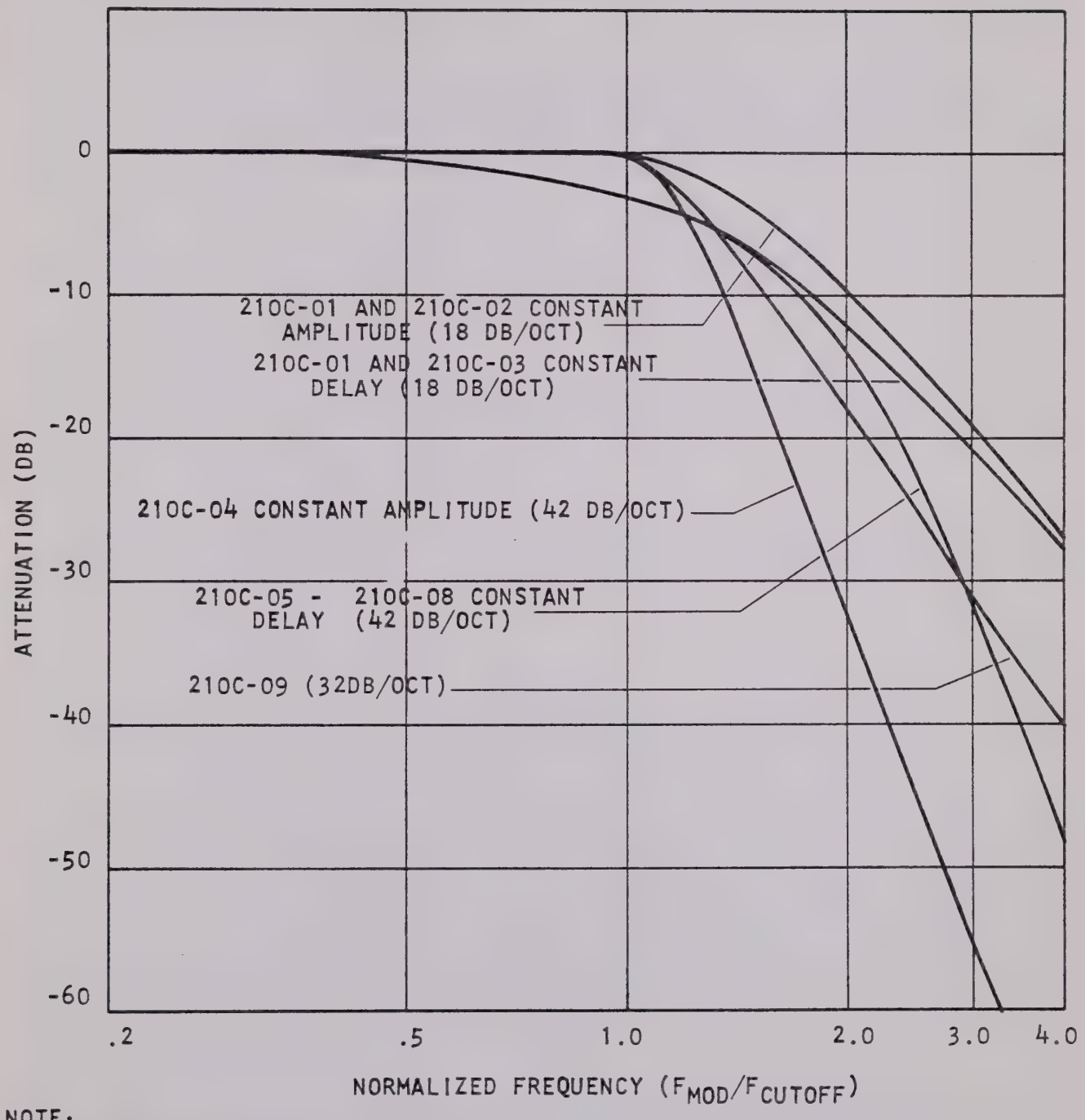


NOTE:
EMR DRAWING CONTROL NO. 210-007.

Figure 5-4. Theoretical Output Filter Response

the junction of 2R606 and 2C604 to the junction of 2R621 and 2R627, and connecting the negative connection of 2C706 to ground.

### 5.3.10 SIGNAL LOSS Lamp

With an unmodulated center frequency input signal, the SIGNAL LOSS lamp should illuminate at approximately 5 millivolts input signal amplitude as the input signal amplitude is reduced. When the SIGNAL LOSS lamp is on, the discriminator output voltage should be 0 ±1 volt with the BANDEDGE VOLTS control at maximum.

The input level at which the SIGNAL LOSS lamp and clamp operate can be adjusted by means of the ZERO SIG THRESH adjustment control.

### 5.3.11 LOCK LOSS Lamp

The operation of the LOCK LOSS lamp can be checked by over-deviating the subcarrier input signal at the maximum modulation frequency defined by the deviation ratio of the channel selector.

### 5.3.12 PERCENT BANDEDGE Meter

By adjusting BALANCE control the PERCENT BANDEDGE meter, 4M201, should read 100 percent (L) at lower bandedge, 0 at band center and 100 percent (U) at upper bandedge.

### 5.3.13 External Zero Offset

The DC offset at the discriminator data output can be varied externally as shown in Figure 5-5. To simplify connections to the discriminator rear connector (1P1), provisions for external zero offset control must be added by field or factory modification. The modification consists of the addition of resistor 2R653 to the secondary card assembly and connection of a wire jumper from 2R653 to pin K of connector 1P1. The type and values of resistor 2R653 are listed in Section 6, Replaceable Parts List. Mounting provisions are provided on the printed-circuit card assembly. When the external zero offset modification is installed, a 10-volt signal at pin K of 1P1 will cause an output DC offset of 10 percent of bandwidth and the sensitivity polarity is negative. After installation of the modification, pin K of 1P1 should be connected to signal ground, pin N of 1P1, when external zero offset control is not used.

### 5.3.14 External Gain

The sensitivity of the discriminator can be varied externally, as shown in Figure 5-5. To simplify connections to the discriminator rear connector (1P1), provisions for external gain control must be added by field or factory modification.

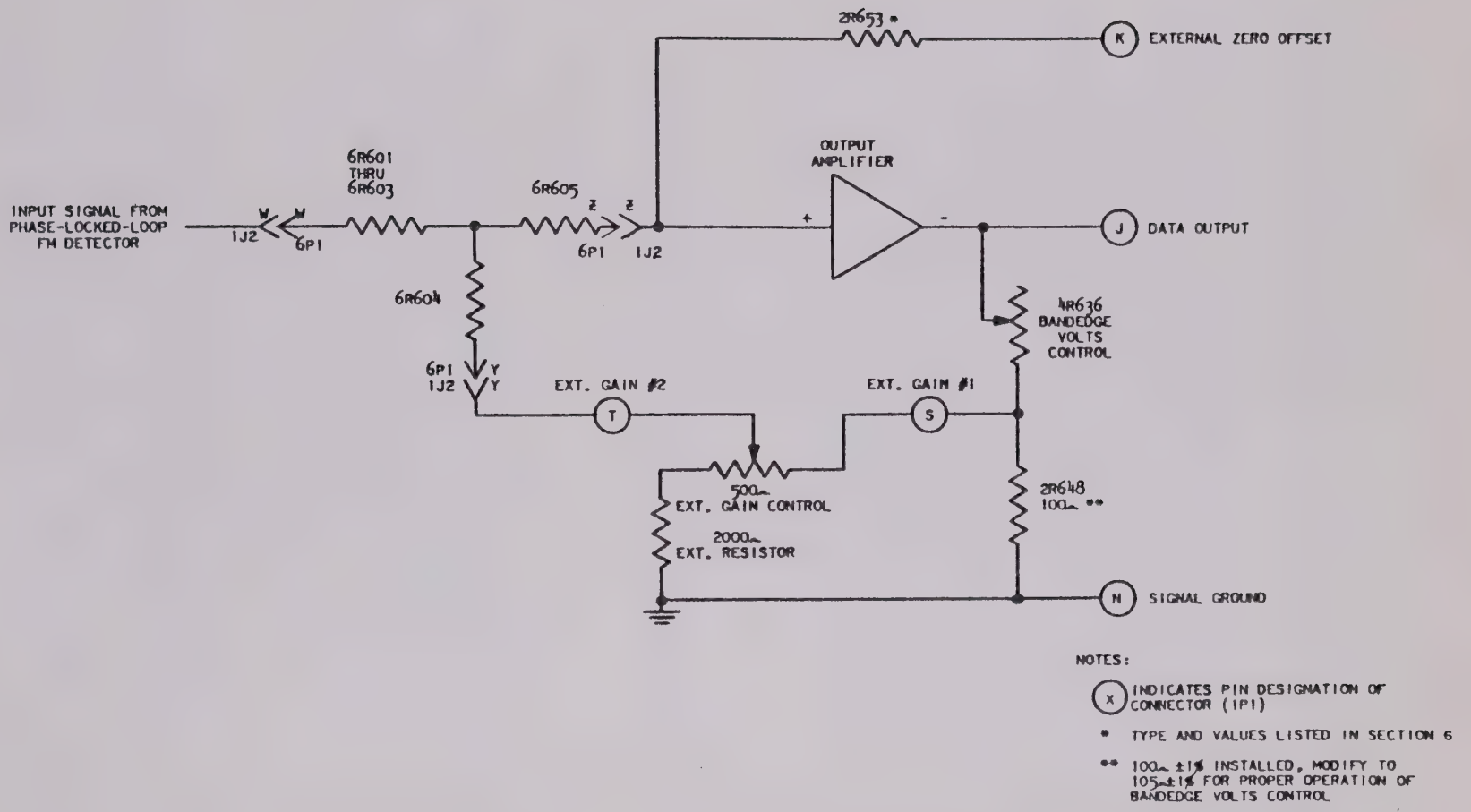


Figure 5-5. Schematic Diagram, External Zero Offset and Gain Controls

To perform the modification, disconnect the wire jumper connected between the junction of 4R636 and 2R648 (on the main printed-circuit card assembly) and pin Y of connector 1J2. Install a jumper from the junction of 4R636 and 2R648 to pin S of 1P1 and a jumper between pin Y of 1J2 and pin T of 1P1.

External components required for remote gain control are a 500-ohm precision potentiometer and a 2000-ohm ±1 percent resistor (IRC type MEA-TO or equivalent). Varying the external gain control from its mid-value (250 ohms) to its extremes varies the output amplifier gain and the discriminator sensitivity by ±10 percent, regardless of the position of the BANDEDGE VOLTS control, 4R636. In order that the calibration of the BANDEDGE VOLTS control be accurate (refer to Section 2, Paragraph 2.1.1, Output Voltage and Current), the value of 2R648 should be changed from 100 ohms ±1 percent to 105 ohms ±1 percent; the calibration is then accurate with the external gain control set for minimum sensitivity (the wiper of the external gain control potentiometer at the end connected to pin S of 1P1). When the external gain control is at its mid-value, the calibration of the BANDEDGE VOLTS control is 10 percent too low. When the external gain control is used for calibration purposes, the voltage at pin S of 1P1 is -1.10 volts at high bandedge and +1.10 volts at low bandedge, with the external gain control in its mid-position.

NOTE

The leads for connecting the external gain control should be low-capacity shielded cable. The total capacitance of each cable should be less than 1000 Pf.

## 5.4 CALIBRATION CHECK

Although the calibration can be checked by various methods, a three-point check should be sufficient. With the discriminator first adjusted for zero output at center frequency, the outputs at the two bandedges should differ by less than 0.1 percent of full bandwidth, indicating a maximum error of 0.05 percent or less. It is of prime importance that the calibration frequencies be accurately determined and that the output-voltage measuring device be extremely accurate so that this degree of precision can be achieved.

## 5.5 TAPE-SPEED-COMPENSATION SYSTEM CHECK

When factory-adjusted discriminators are used in a tape-speed-compensation system similar to that shown in Figure 3-13, improvement ratios in excess of 20:1 for tape speed errors of ±4 percent and 30:1 for tape speed errors of ±3 percent should be obtainable without further adjustment.

The adjustments described in Paragraphs 5.5.1 and 5.5.2 can be made with a magnetic-tape playback as the system input. Adjustments can be made and system performance checked as follows:

a. The subcarriers of the recorded multiplex should be unmodulated.

b. The compensation improvement ratio of each data channel can be determined by dividing its RMS voltage output with the reference channel selector TSC ON-OFF switch OFF by its output voltage with the TSC ON-OFF switch to ON.

NOTE

Accurate measurements of TSC improvement cannot be made unless the tape-speed-error signal in the output of a compensated data channel is significantly greater than the normal channel noise output (including recorder noise, crosstalk, etc.). For this reason, it is usually necessary to introduce excessive tape-speed errors by increasing the eccentricity of the recorder tape-driven capstan; a piece of plastic tape applied to the capstan is satisfactory for this purpose.

c. Tape-speed errors should not exceed ±4 percent. The tape-speed variation can be monitored by an oscilloscope connected to the reference discriminator output; one volt is equivalent to 0.75 percent speed variation.

d. The Gain (G) and Delay (D) adjustments on the Model 210T Reference Channel Selector can be adjusted for optimum compensation improvement in the data channels.

5.5.1 Adjustment of Gain (G) Control

The Gain (G) control of the reference channel selector is factory-adjusted for a reference discriminator sensitivity of 10 volts per 7.5 percent subcarrier period variation and normally will require no further adjustment. Should misadjustment occur, use the following procedure for setting the current sensitivity:

a. Apply a 1-volt RMS input signal to the reference discriminator at exactly the reference center frequency. Adjust the BALANCE control for zero output.

b. Deviate the reference frequency to exactly $\frac{1}{1.075}$ =0.93023 times the center frequency, and adjust the G control for a discriminator output of +10 volts. A voltmeter with an accuracy of 0.2 percent or better should be used.

c. Deviate the reference frequency to $\frac{1}{0.925}$ = 1.08108 times the center frequency, and adjust the G control for an output of -10 volts.

d. Repeat the previous steps until error under both conditions has been minimized. This adjustment sets the reference discriminator to a sensitivity of 10 volts per 7.5 percent subcarrier period variation.

### 5.5.2 Adjustment of Delay (D) Control

The Delay (D) control on the reference channel selector front panel adjusts the total time-delay of the reference discriminator to match that of the EMR Model 230 Signal Delay Unit. This control is factory-adjusted in conjunction with a specific signal delay unit and normally needs no further adjustment. Should misadjustment occur, use the following procedure for setting the delay:

a. Using the test set-up shown in Figure 5-6, set the Switchable Voltage-Controlled Oscillator to the center frequency of the Model 210T Reference Channel Selector.

b. Adjust the BALANCE control on the reference channel selector for zero-volt output.

c. Set the audio oscillator to the cutoff frequency corresponding to a deviation ratio of 5 for the reference channel (example: 1500 CPS for a 100 Kc ±7.5 percent reference channel selector). Adjust the oscillator amplitude, and set the VCO controls for full bandwidth deviation.

d. Adjust the Model 210A Discriminator BANDEDGE VOLTS control and D control for a vertical null as displayed on the oscilloscope. This adjustment properly sets the delay of the reference discriminator to that of the signal delay unit.

## 5.6 TROUBLESHOOTING

The performance tests as outlined in Paragraph 5.3 will isolate most discriminator malfunctions to a functional circuit. Thereafter, isolation of malfunctions is performed with reference to schematic diagrams, component location diagrams and Table 5-2, Transistor Voltages. This table lists the DC voltages at the terminal of all transistors during normal operation.

Make all AC and DC voltage measurements with signal ground as reference (the three ground test points on the front panel of the Model 223B Power Supply and the discriminator ground test point, TP-1, are all signal ground). Test points and adjustments are located at the top of the Model 210A Discriminator chassis as shown in Figure 5-1 and defined in tabular form in Table 5-1. Access to the test points can be achieved by the use of the Model 222B Test Adapter. Test-point voltages and waveforms are shown in Figure 5-3.

Access to components on the printed-circuit cards can be achieved, with the equipment energized and operating normally, by use of the Model 222B Test Adapter. Access to components located on the main discriminator printed-circuit card, but behind the channel selector and output filter plug-in modules, is provided by extending those modules away from the discriminator chassis by means of an EMR Right Angle Test Adapter (210-01).

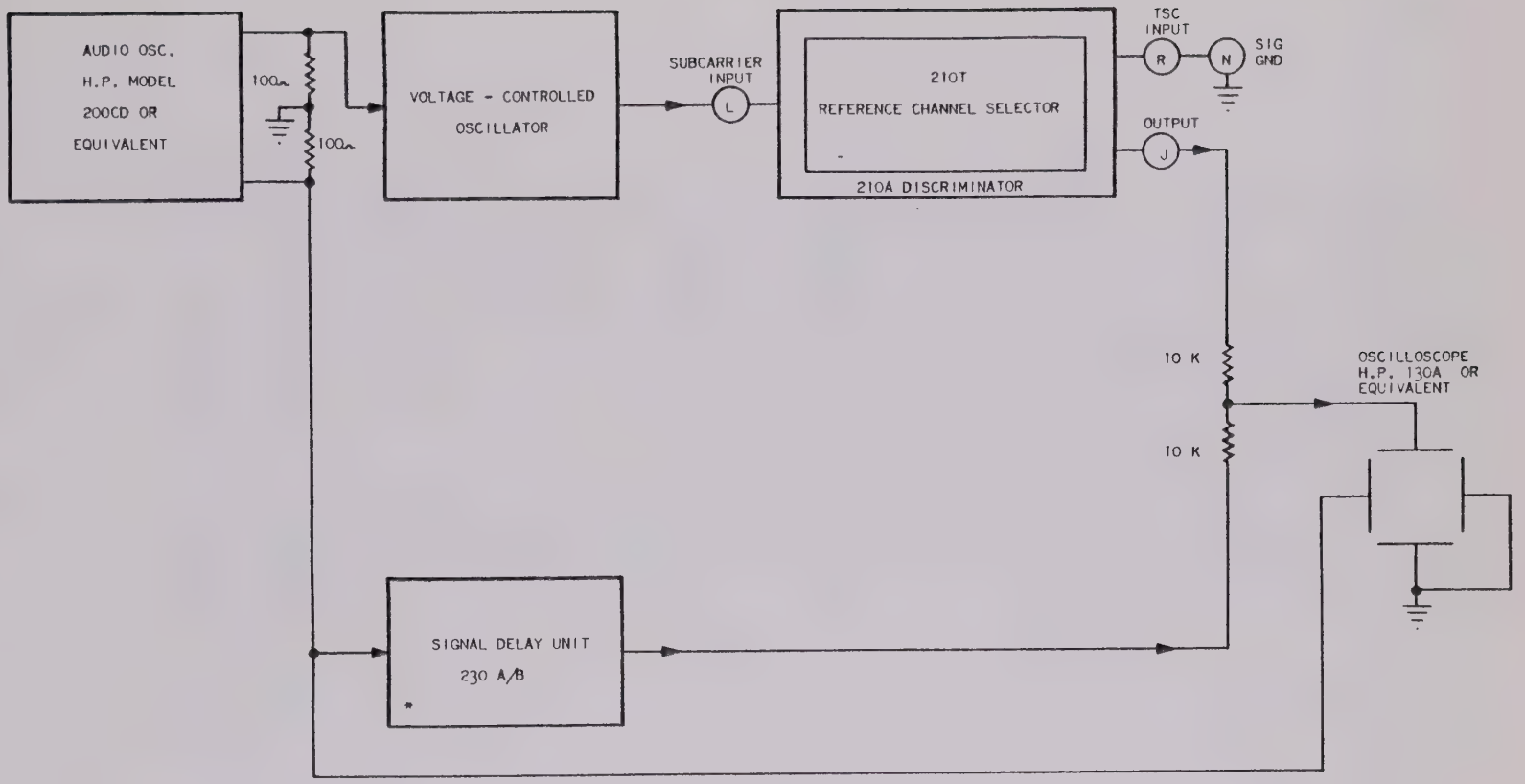


NOTES:

1. REFERENCE CHANNEL SELECTOR IS TESTED WITH A SPECIFIC SIGNAL DELAY UNIT.
2. SIGNAL DELAY UNIT CONTAINS TERMINATION RESISTANCES.
3. ◯ INDICATES PIN OF 210A REAR CONNECTOR (1P1).
4. EMR DRAWING CONTROL NO. 210-008.

Figure 5-6. Test Set-Up, Model 210T Reference Channel Selector Adjustment

Table 5-2. Transistor Voltages

| Transistor | Base | Emitter | Collector |
|---|---|---|---|
| 1Q301 | -.3V | GND | -8.8V |
| 1Q302 | -8.8 | -8.6 | -15 |
| 1Q303 | +20 | +11.6 | GND |
| 1Q304 | +11.4 | +11.6 | +11.8 |
| 1Q305 | +11.8 | +.15 | -.4 |
| 1Q306 | +.15 | GND | -64 |
| 1Q307 | -.27 | GND | -.12 |
| 1Q308 | -5.7 | GND | -14.9 |
| 1Q309 | +2.5 | GND | +.25 |
| 1Q401 | -.85 | GND | +4.0 |
| 1Q402 | -.88 | GND | +4.1 |
| 1Q104 | +.46 | +.6 | -5.1 |
| 1Q105 | +.6 | +.76 | -5.1 |
| 1Q106 | -.23 | GND | -7.8 |
| 1Q107 | -7.8 | -7.5 | -15 |
| 1Q108 | -.23 | GND | -7.2 |
| 1Q109 | -7.2 | -7.0 | -15 |
| 1Q110 | +9.3 | +9.5 | GND |
| 1Q111 | -7.0 | -7.2 | -7.2 |

| Transistor | Base | Emitter | Collector |
|---|---|---|---|
| 1Q201 | -.05V | GND | -7.6V |
| 1Q202 | -9.0 | -9.2 | -.4 |
| 1Q203 | -.38 | -.25 | -15 |
| 1Q204 | -.25 | -.1 | -13.5 |
| 1Q205 | -9.2 | -7.4 | GND |
| 1Q206 | +9.3 | -7.4 | GND |
| 1Q207 | -9.1 | -7.4 | -.4 |
| 1Q208 | -9.3 | -7.4 | GND |
| 1Q209 | -7.2 | -7.4 | -.4 |
| 1Q210 | -9.2 | -7.4 | GND |
| 1Q211 | +.42 | +.27 | +13.3 |
| 2Q601 | +.26 | -.36 | GND |
| 2Q602 | -.36 | -.24 | -7.6 |
| 2Q603 | -7.6 | -7.5 | -13 |
| 2Q604 | -14 | -14.2 | -4.8 |
| 2Q605 | -14.2 | -14.2 | -.5 |
| 2Q606 | -.5 | -.37 | -14.4 |
| 2Q607 | -.3 | -.1 | -14.7 |
| 2Q608 | -14.7 | -14.8 | -.27 |

Table 5-2 (Cont'd.). Transistor Voltages

| Transistor | Base | Emitter | Collector |
|---|---|---|---|
| 2Q609 | -.27V | -.28V | -18V |
| 2Q610 | +14.4 | +14.7 | -.12 |
| 2Q611 | -.12 | -.22 | +14.7 |
| 2Q612 | -.3 | -.4 | +14.8 |
| 2Q613 | +14.8 | +15 | -.27 |
| 2Q614 | -.27 | -.27 | +18 |
| 2Q701 | -.3 | 0 | GND |
| 2Q702 | -.24V | -.12 | -13.2 |
| 2Q703 | -.12 | -.02 | -7.0 |
| 2Q704 | -7.0 | -6.8 | GND |
| 2Q705 | -.1 | -.02 | -6.4 |
| 2Q706 | -9.9 | -10.0 | -.26 |
| 2Q708 | +1.9 | GND | +.1 |
| 2Q709 | -1.8 | GND | +.1 |
| 2Q710 | +6.2 | +4.3 | -.08 |
| 2Q711 | +5.9 | +4.3 | +.14 |
| 2Q801 | -15.5 | -16.0 | -18.0 |
| 2Q802 | -15.8 | -15.5 | -18.0 |
| 2Q803 | -14.8 | -15.0 | -15.8 |
| 2Q804 | -9.0V | -8.8V | -15.0V |
| 2Q805 | -17.5 | -17.8 | -15.8 |
| 2Q806 | -9.1 | -8.8 | -15.8 |
| 2Q807 | +15.5 | +16.0 | +18.0 |
| 2Q808 | +15.8 | +15.5 | +18.0 |
| 2Q809 | +14.8 | +15.0 | +15.8 |
| 2Q810 | +9.0 | +8.8 | +15.0 |
| 2Q811 | +9.1 | +8.8 | +15.8 |
| 2Q812 | +17.5 | +17.8 | +15.8 |
| Oven Controller With Temperature Maximum | | | |
| 3Q501 | -1.5V | -1.3V | -1.2V |
| 3Q502 | -1.2 | -1.4 | -15 |
| 3Q503 | -15 | -15 | -5 |
| 3Q504 | -15 | -14.5 | -24 |
| Oven Controller With Oven OFF | | | |
| 3Q501 | -.5V | -.5V | -2.15V |
| 3Q502 | -2.15 | -1.8 | -1.7 |
| 3Q503 | -1.7 | -2.1 | -15 |
| 3Q504 | -2.1 | -1.75 | -24 |

Table 5-2 (Cont'd.). Transistor Voltages

| Transistor | Base | Emitter | Collector |
|---|---|---|---|
| 3Q405 | -15.5V | -15.0V | -13.0V |
| 3Q406 | -15.5 | -15.0 | -13.0 |
| 3Q407 | -10.5 | -11.5 | GND |
| 5Q101 | 0.0 | +0.15 | -8.5 |
| 5Q102 | +0.32 | +0.32 | -14.0 |
| 5Q103 | +0.85 | +0.52 | +14.0 |
| 5Q403 | -7.62 | -7.58 | -15 |
| 5Q404 | -0.18 | GND | -7.62 |
| Inverting Amplifier at Band Center | | | |
| 7Q901 | 0.6 | -0.6 | +8.1 |
| 7Q902 | 0.0 | -0.6 | +8.1 |
| 7Q903 | +8.1 | +8.7 | -13.6 |
| 7Q904 | +8.1 | +8.7 | +0.3 |
| 7Q905 | +0.3 | 0.0 | +15 |
| 7Q906 | -0.3 | 0.0 | -15 |

## 5.7 REPAIRS

Components are physically located in six subassemblies. A coded designation number (corresponding to the component part number on each subassembly assembly drawing, schematic diagram, and the replaceable parts list) is permanently stamped opposite each component on the subassembly printed-circuit card or panel.

Component designations are coded as follows:

| 1 | R | 209 |
|---|---|---|
| Physical Location (Subassembly No. 1) | Component Type (Resistor) | Component Circuit (200 Series is phase detector and loop amplifier) |

Parts location diagrams and schematic diagrams of all subassemblies are shown in Figures 5-7 through 5-70.

A red dot is stamped on the printed-circuit card opposite each component, designating the same electrical connection indicated by a corresponding dot located adjacent to one end of each component symbol on the schematic diagram. By using these dots, waveforms and voltages can be measured at any point on the printed-circuit card wiring that corresponds to a circuit location on the schematic. This may be done without tracing printed-circuit busses which may be located on the blind side of the card, and thus, without disassembly of the discriminator.

Component designations are coded to show circuit usage. The component circuit codes are as follows:

| Component Circuit Code | Circuit |
|---|---|
| 100 Series (example: 5R101) | Limiter |
| 200 Series | Phase Detector and Loop Amplifier |
| 300 Series | Loss-of-Signal and Loss-of-Lock |
| 400 Series | Voltage-Controlled Oscillator |
| 500 Series | VCO Oven Controller |
| 600 Series | Output Amplifier |
| 700 Series | Chopper Amplifier |
| 800 Series | Power Supply Regulators |
| 900 Series | Inverting Amplifier |

The output amplifier, chopper amplifier and power supply regulator circuits are located on the secondary printed-circuit card assembly (2). All other circuits are located on the main printed-circuit card assembly (1) except for front-panel controls and components contained in the channel selector and

output filter plug-in modules. The VCO oven assembly (3) is part of the main printed-circuit card assembly (1).

When a faulty component has been located, refer to the replaceable parts list for a complete description of the replacement part. The manufacturer, manufacturer's part number and ordering information (value, tolerance, voltage, wattage, etc.), Electronic Industries Association (EIA) part number, and Military (MIL) part number are shown where applicable. Replacement parts can be ordered from EMR. Specify the model number, component designation, and complete manufacturer's part number. All components can be replaced with any component having the same manufacturer's part number, EIA part number, or MIL number as listed in the replaceable parts list for the component.

After replacing a faulty component, check performance and make adjustments as required. After component replacement, all adjustments can be accomplished by the adjustment controls provided except for replacement of the following:

Components of the VCO Oven Controller: 3R505, 3R506, 3R507, 3R509, 3RT501, 3Q501. After replacement of any of these components, readjust the oven temperature by the procedure outlined in Paragraph 5.3.6.

Bandpass input filter and signal delay unit components: 5FL101, 5C407, 5C408, 5C409. These components are located in the Model 210B Channel Selector. The time delay of the delay network is adjusted at the factory to be equal to that of the BPIF (refer to Paragraph 4.3.13. Due to the complex test equipment and procedure required for the delay adjustment, the channel selector should be returned to the factory when repair is necessary.

Access for replacement of components mounted on the main and secondary printed-circuit card assemblies can be obtained by disassembly of the secondary printed-circuit card assembly and inter-card shield from the discriminator chassis by removing the mounting screws attaching them to the main printed-circuit card assembly.

CAUTION

Do not disassemble the main printed-circuit card from the discriminator chassis. The main printed-circuit card, connector 1J2, and the front-panel assembly are jig-assembled in the discriminator chassis to provide mechanical interchangeability of plug-in modules and discriminators in the rack adapter.

Access to components mounted in the VCO oven assembly can be achieved by disassembly of the outer oven cover by removing the screws retaining it to the main printed-circuit card assembly. The VCO oven printed-circuit card can be removed as follows: Disassemble the mounting hardware retaining 3Q504, unplug 3Q504, remove the inner enclosure end cap, and withdraw the card using the pin provided.

Access for replacement of components of the channel selector and output filter can be obtained by removing the printed-circuit card assemblies from the extruded chassis. Remove the screws located at the top and bottom of the extruded chassis adjacent to the panel and withdraw the card assembly by pulling the panel away from the chassis.

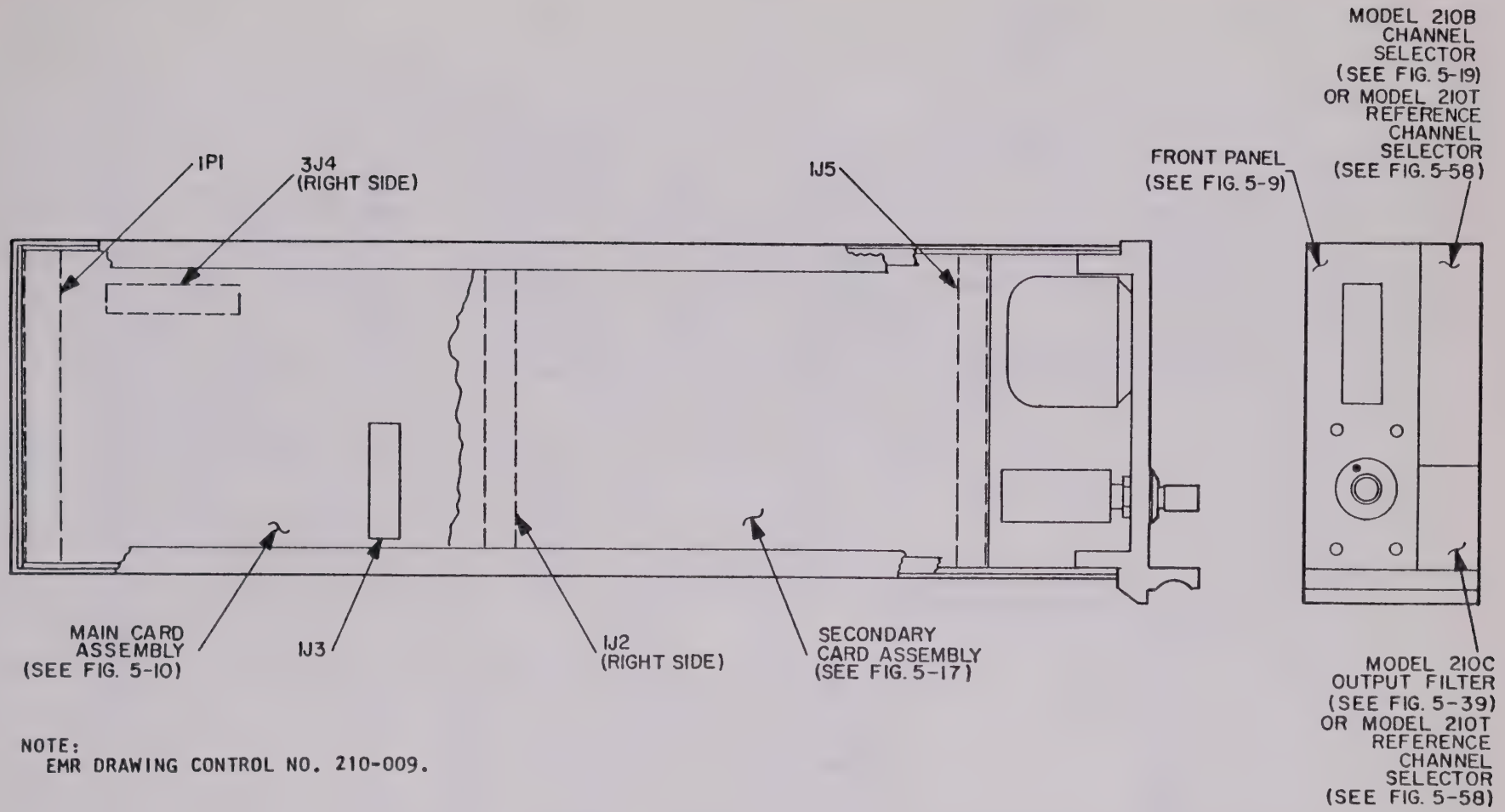


NOTE:
EMR DRAWING CONTROL NO. 210-009.

Figure 5-7. Model 210 Subcarrier Discriminator Assembly

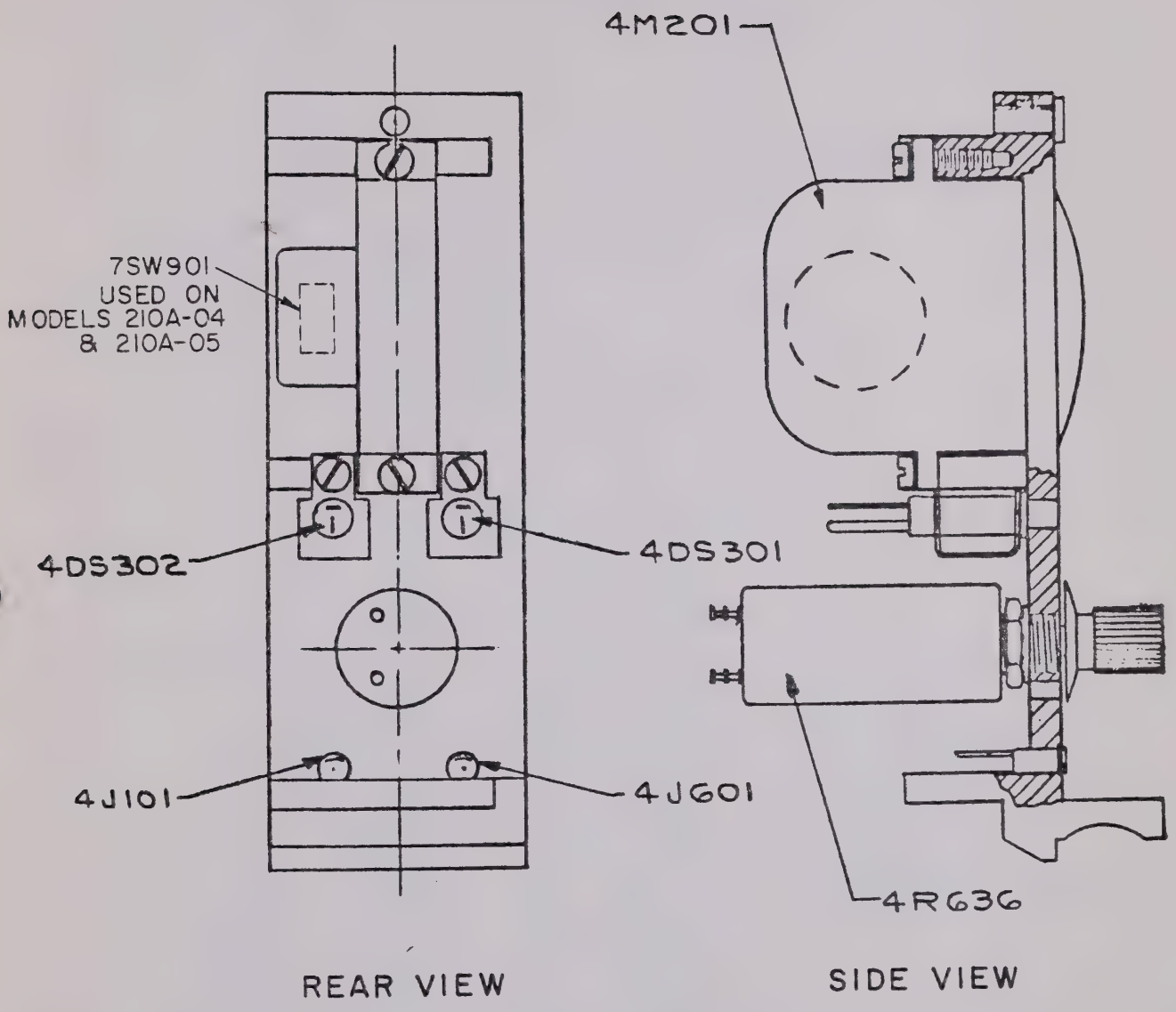


Figure 5-9. Component Locations, Model 210A Front Panel Assembly

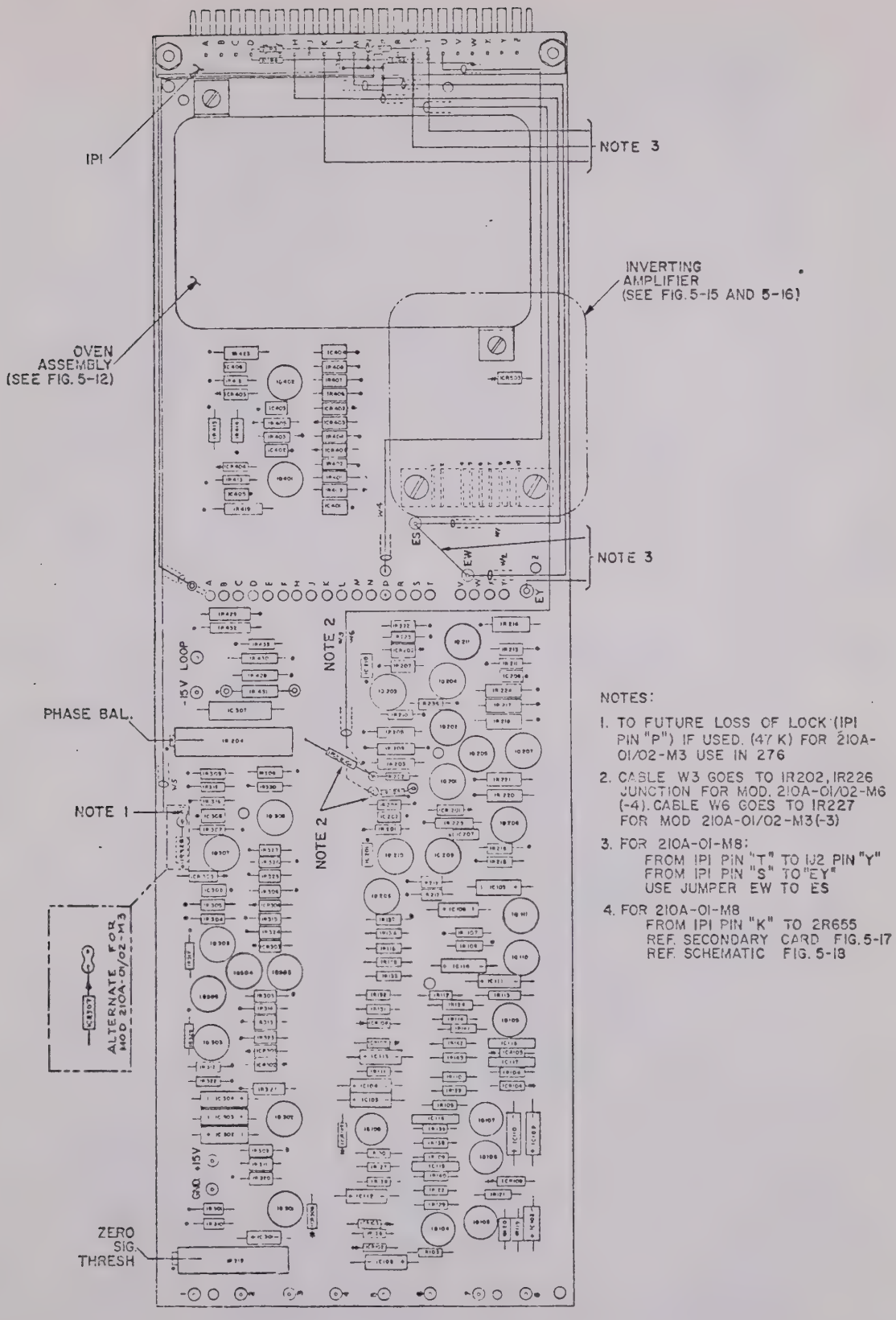


Figure 5-10. Component Locations, Main Printed-Circuit Card Assembly

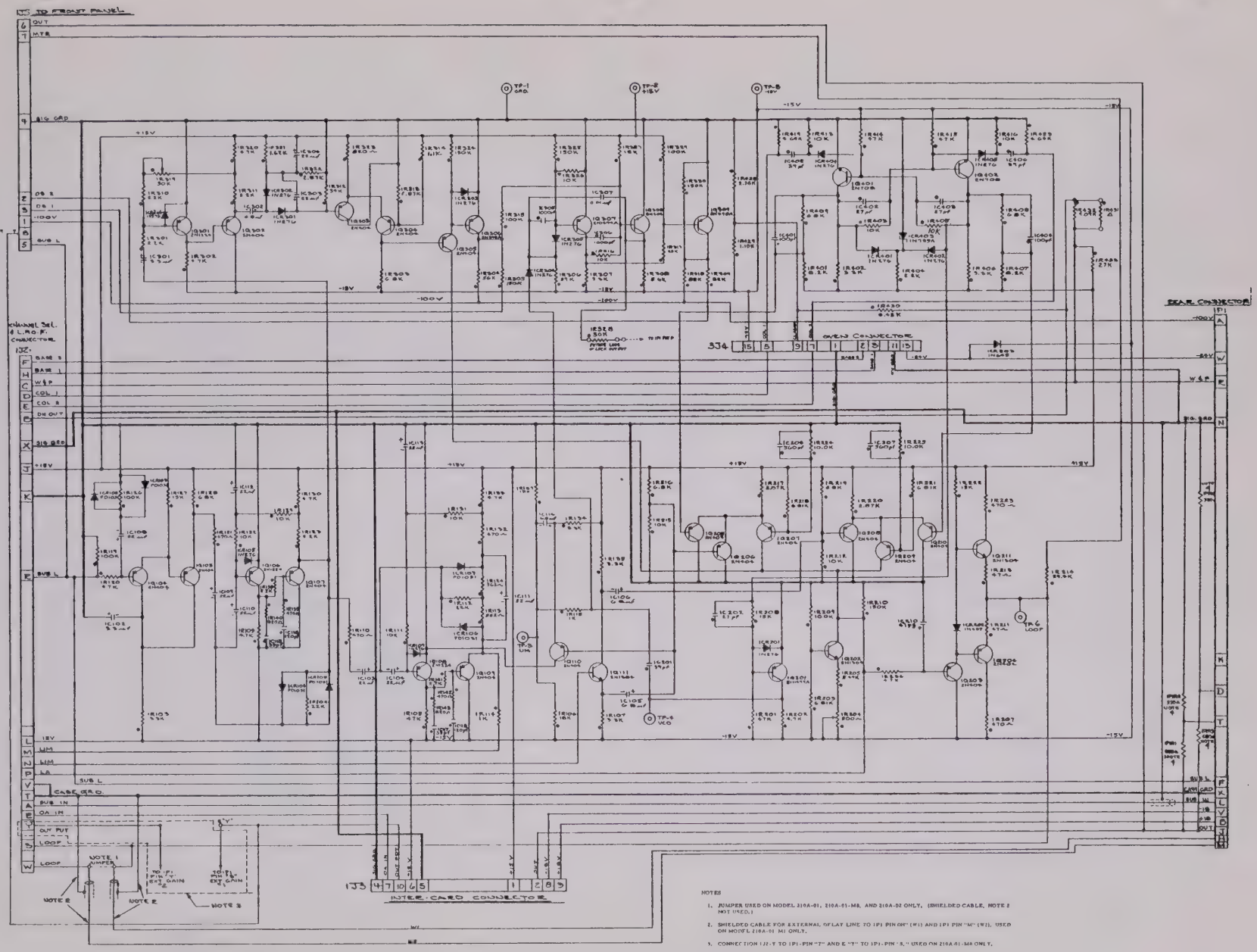

Figure 5-11 Model 210A Main Printed-Circuit Card, Schematic Diagram

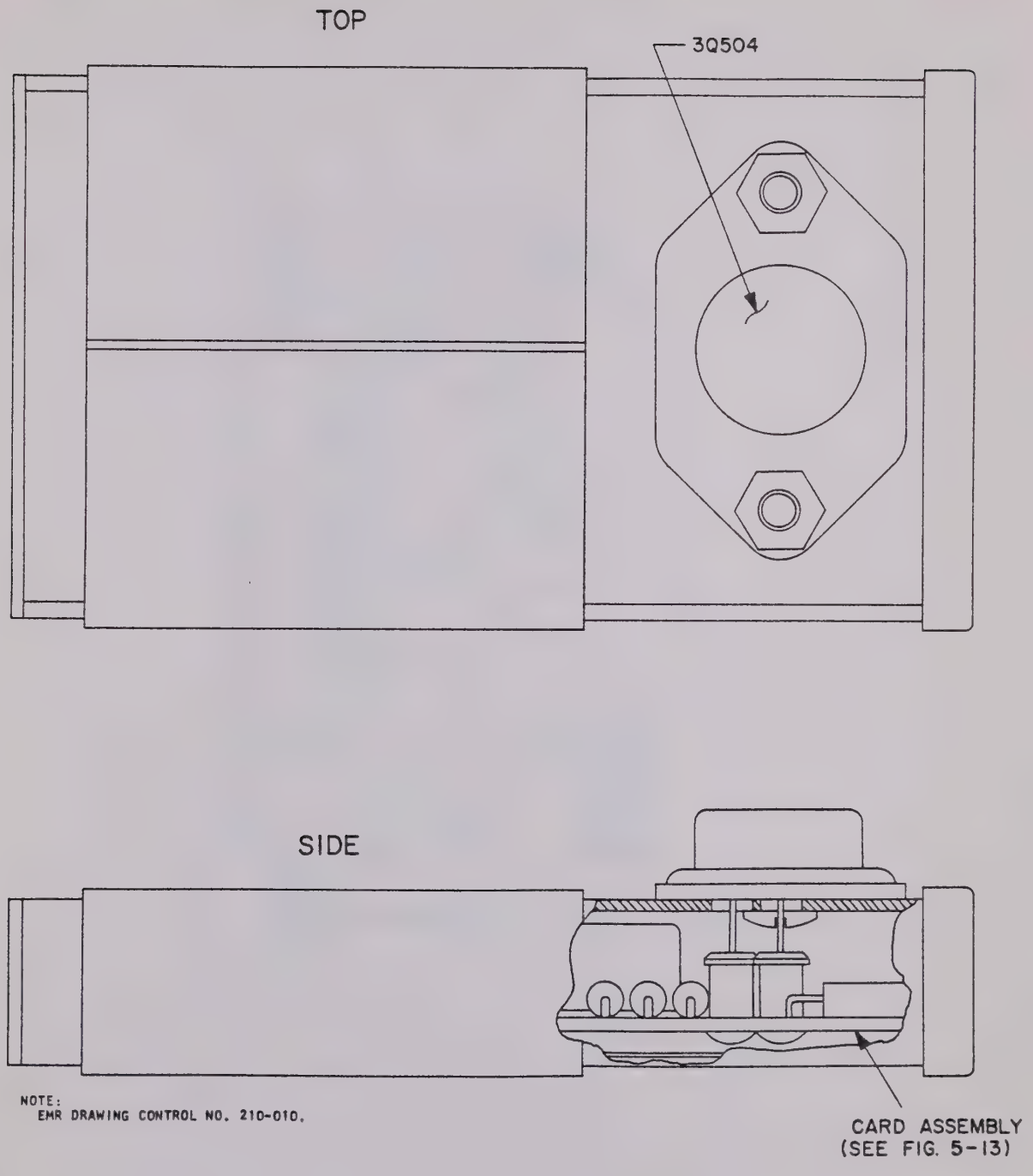


Figure 5-12. Oven Assembly

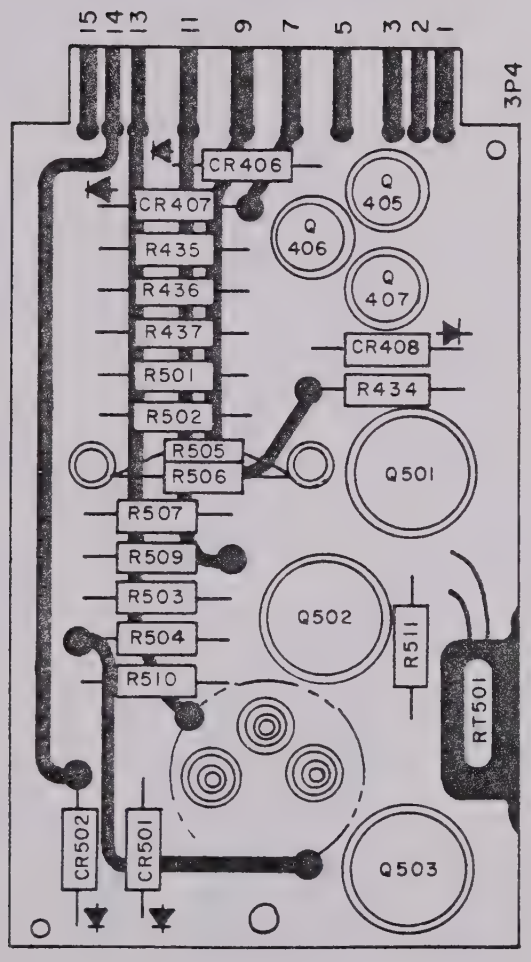


Figure 5-13. Component Locations, Oven Printed-Circuit Card Assembly

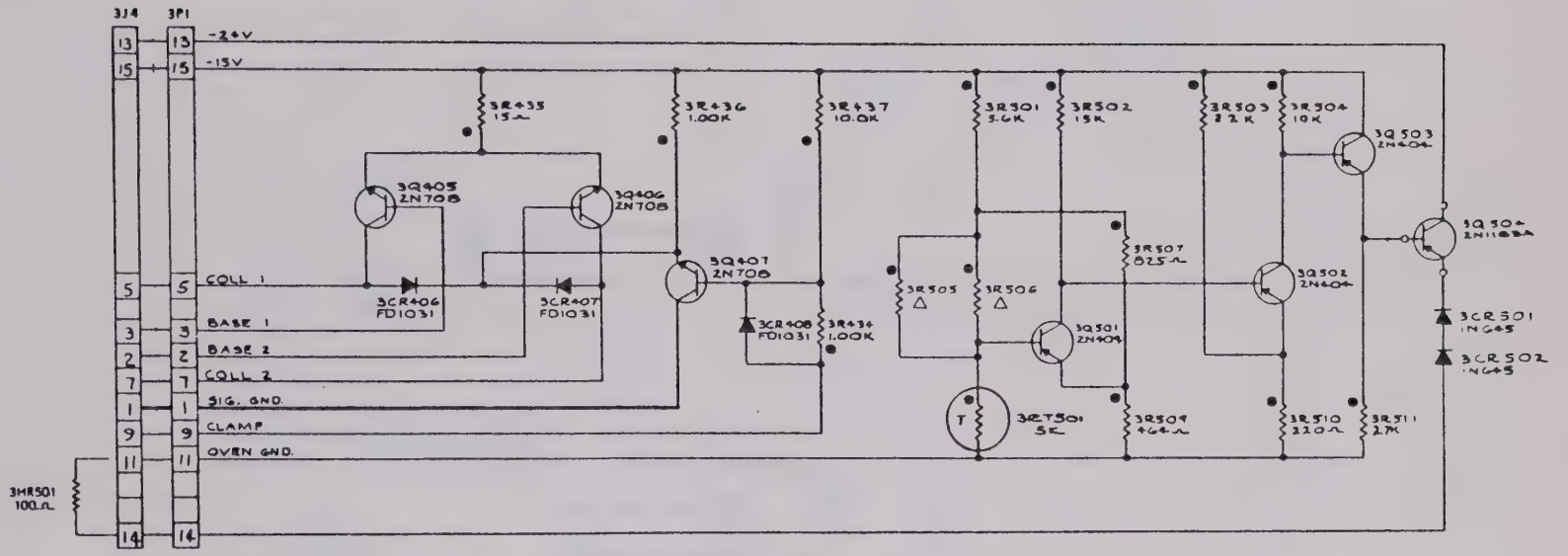


NOTES:
1) ALL RESISTOR VALUES ARE OHMS (K=1000) UNLESS OTHERWISE NOTED.
2) Δ VALUE TO BE DETERMINED AT TEST.

Figure 5-14. Schematic Diagram, Oven Assembly

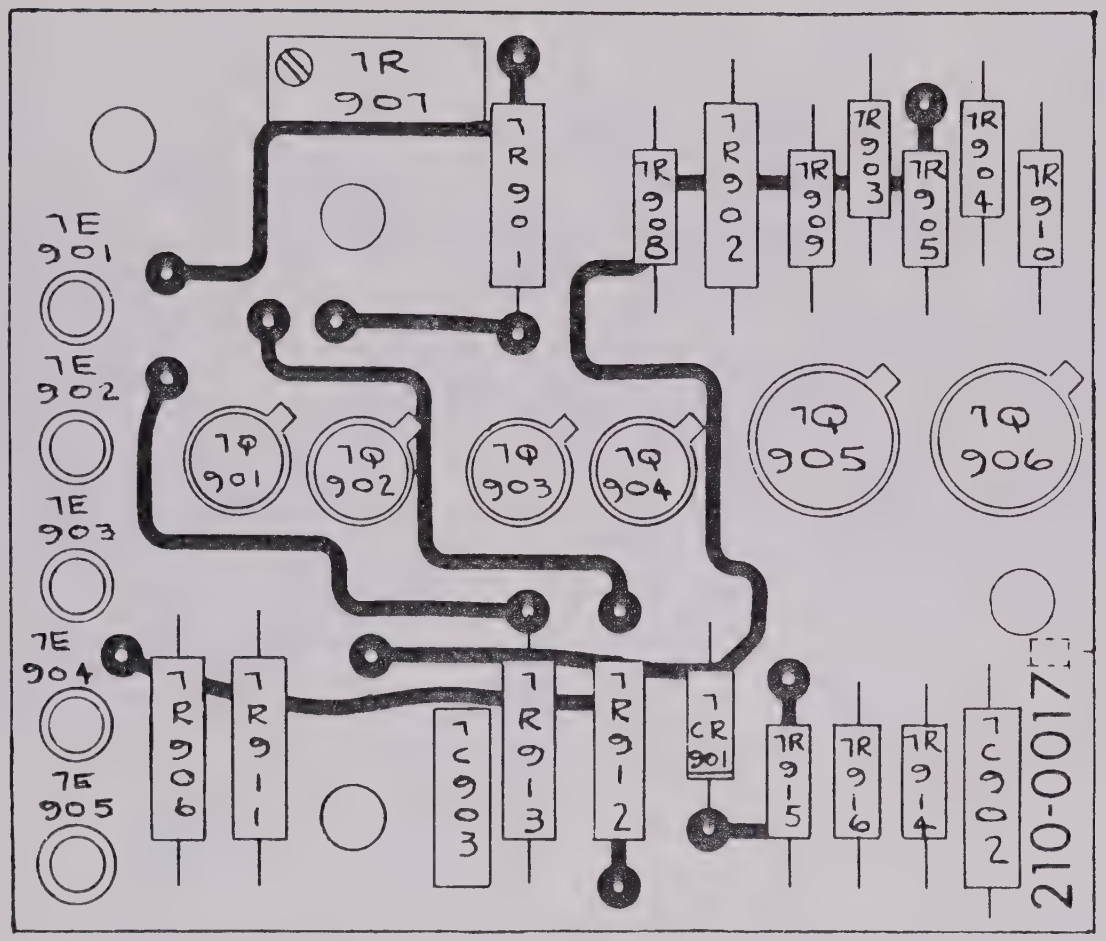


Figure 5-15. Component Locations, Inverting Amplifier Printed-Circuit Card Assembly

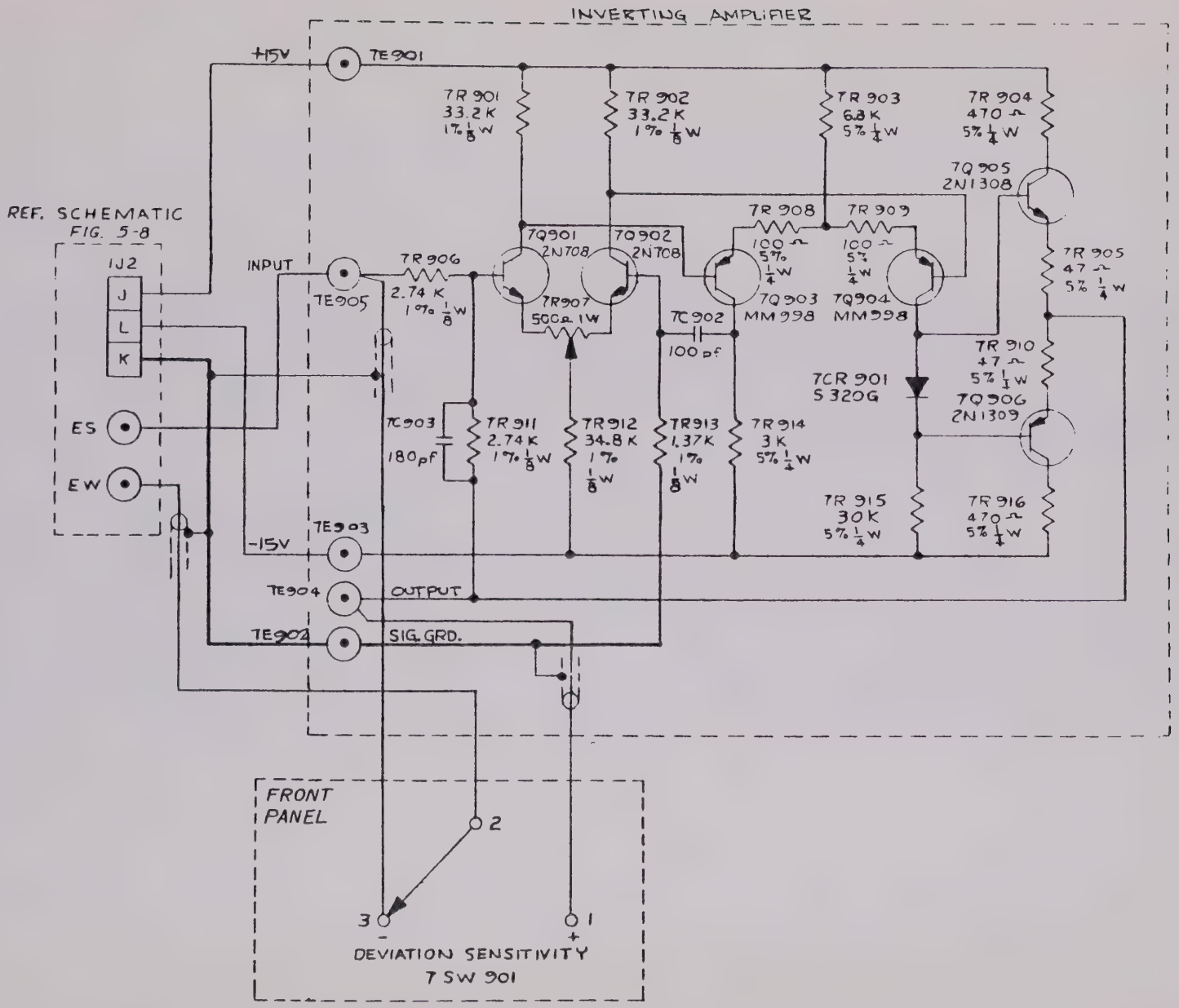


Figure 5-16. Schematic Diagram, Inverting Amplifier Printed-Circuit Card Assembly

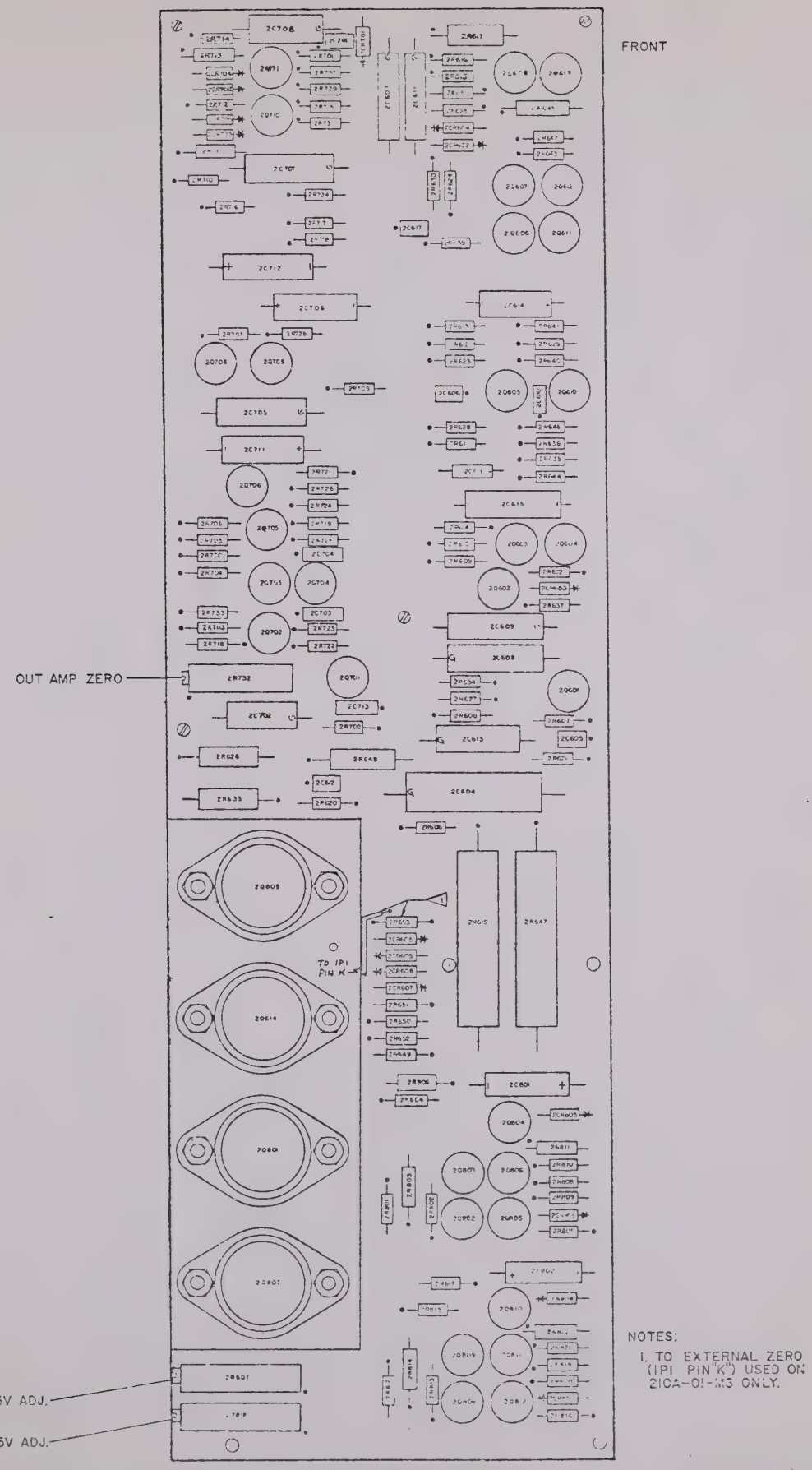


Figure 5-17. Component Locations, Secondary Printed-Circuit Card Assembly

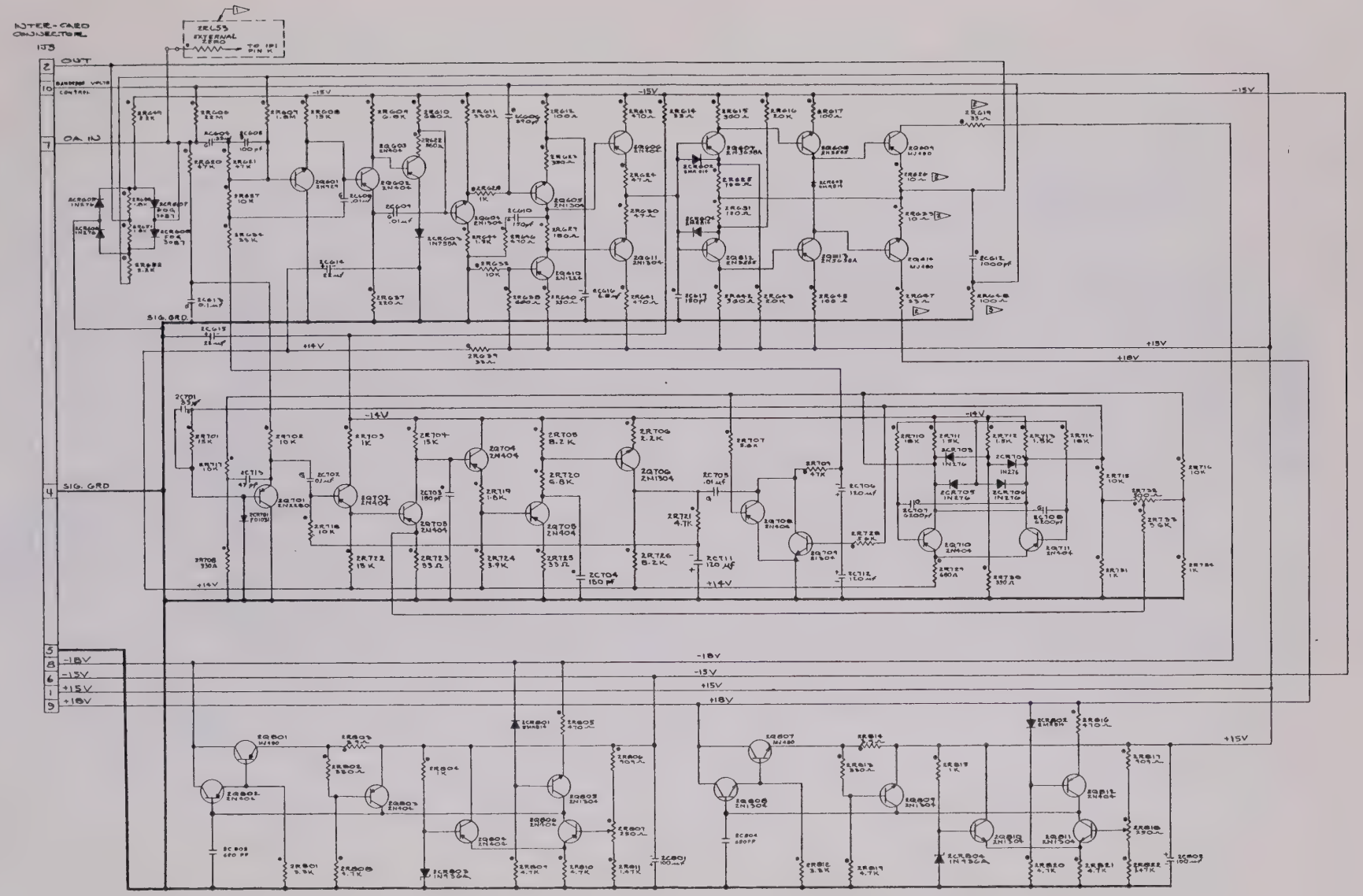


NOTES:

1. RESISTOR 2R653 USED ON MODEL 210A-01-M8 ONLY.
2. RESISTORS 2R619 AND 2R647 ARE 160 FOR MODEL 210A-04-M25 AND 100 FOR MODEL 210A-01-M31. RESISTORS 2R626 AND 2R633 ARE 5.4Ω FOR MODEL 210A-04-M25 AND 30 FOR MODEL 210A-01-M31.
3. RESISTOR 2R648 NOT USED ON MODEL 210A-01-M28.
4. EMR DRAWING NO. 210-1005, REV. V.

Figure 5-18. Schematic Diagram, Secondary Printed-Circuit-Card Assembly

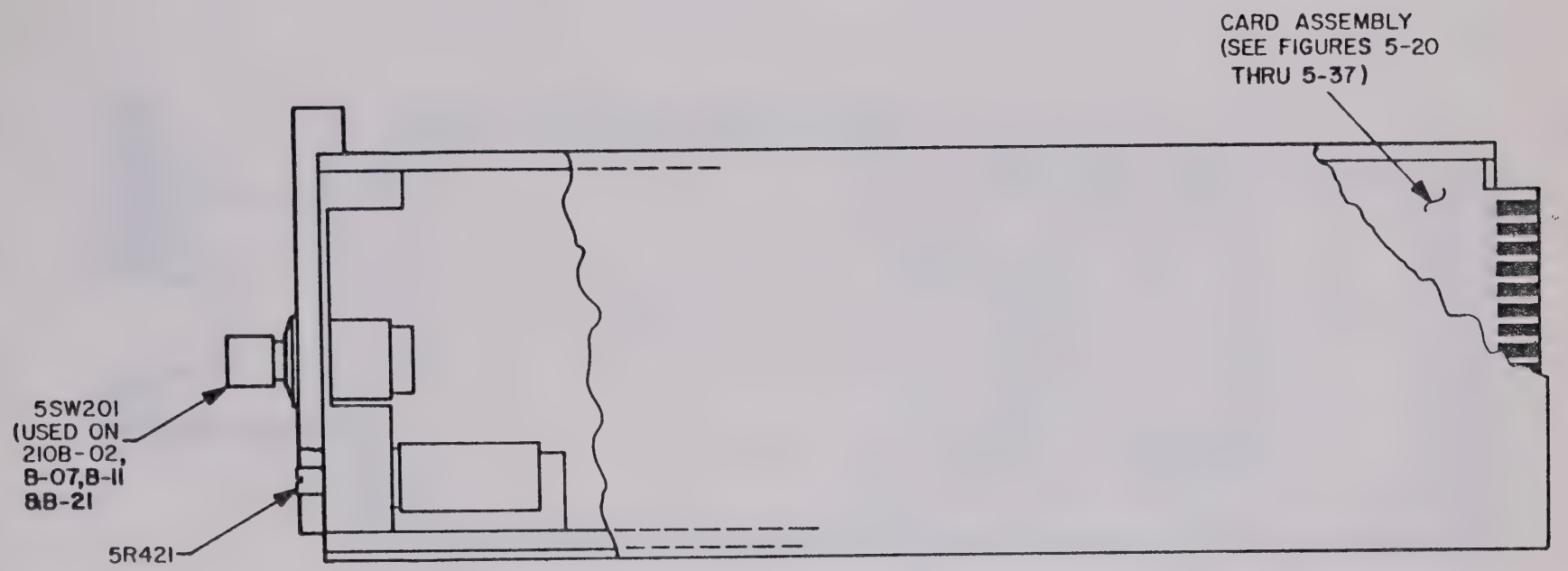


NOTE:
EMR DRAWING CONTROL NO. 210-013.

Figure 5-19. Model 210B Channel Selector Assembly

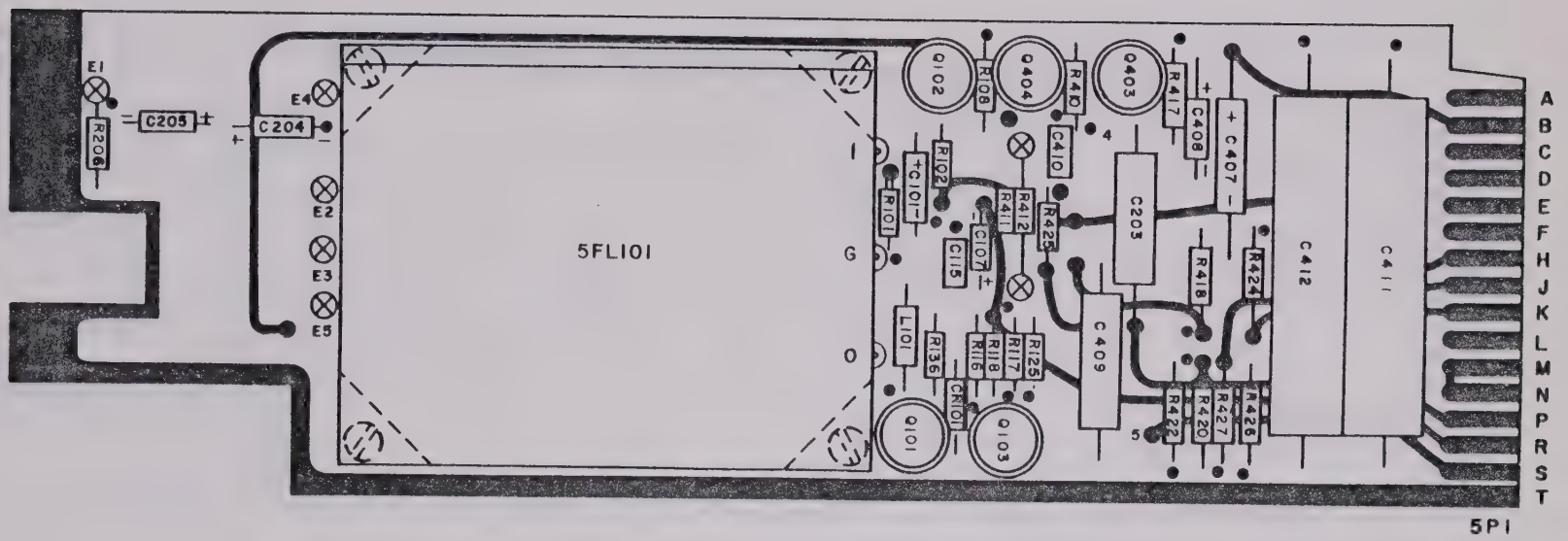


Figure 5-20. Component Locations, Models 210B-01 and 210B-05 Printed-Circuit Card Assembly (Below 2.3 Kc)

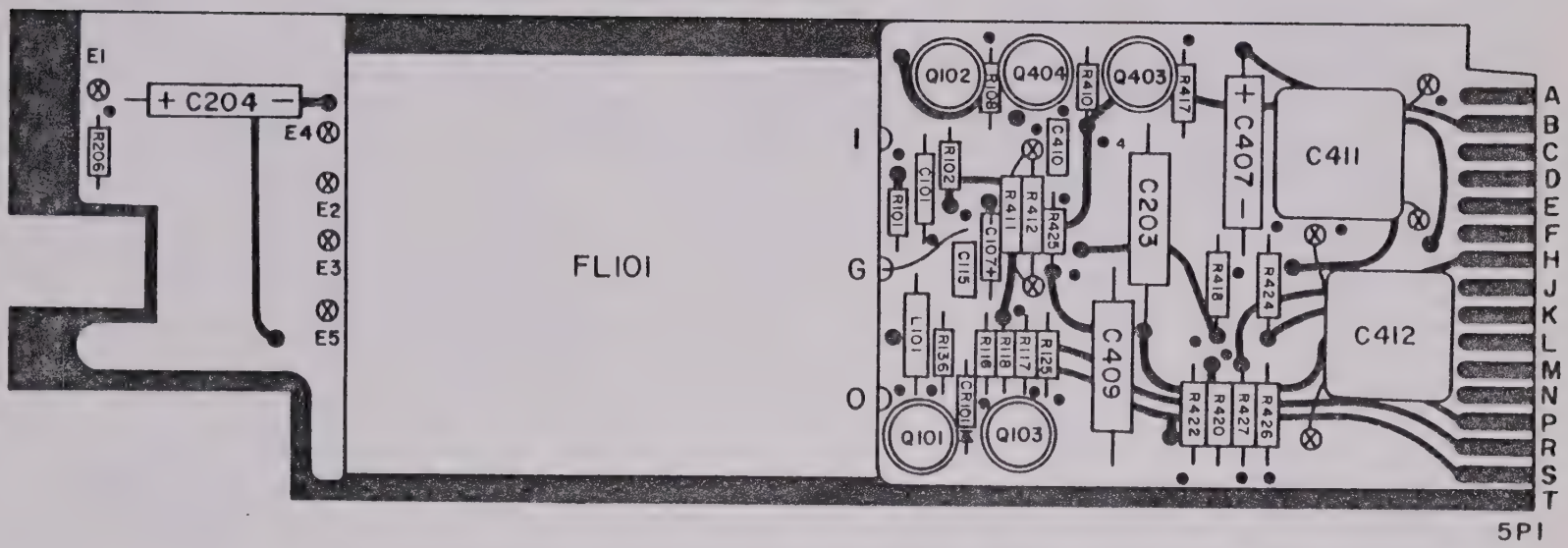


Figure 5-21. Component Locations, Model 210B-01 Printed-Circuit Card Assembly (2.3 Kc and above)

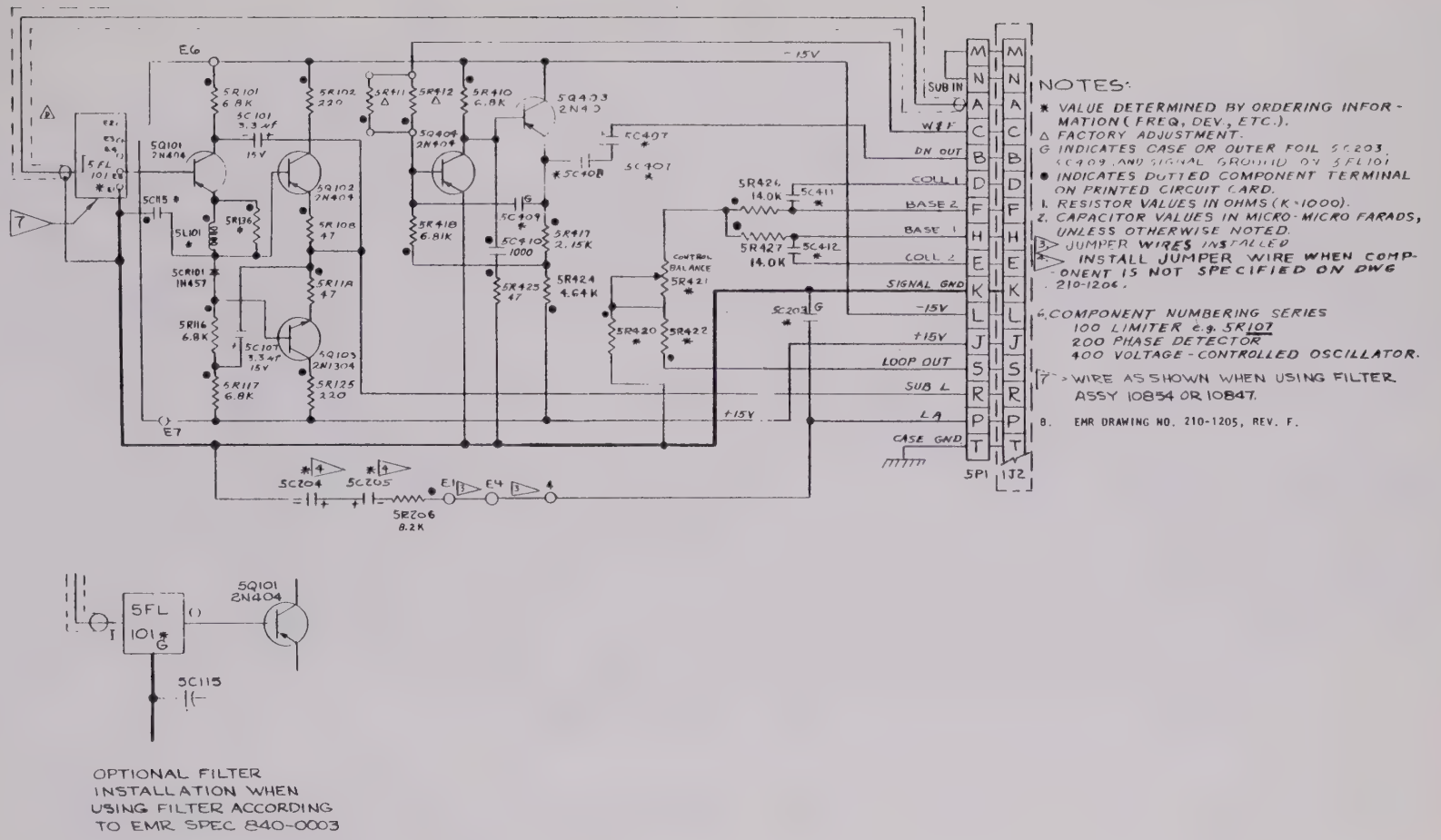





OPTIONAL FILTER INSTALLATION WHEN USING FILTER ACCORDING TO EMR SPEC 840-0003

Figure 5-22. Schematic Diagram, Model 210B-01 Channel Selector Assembly

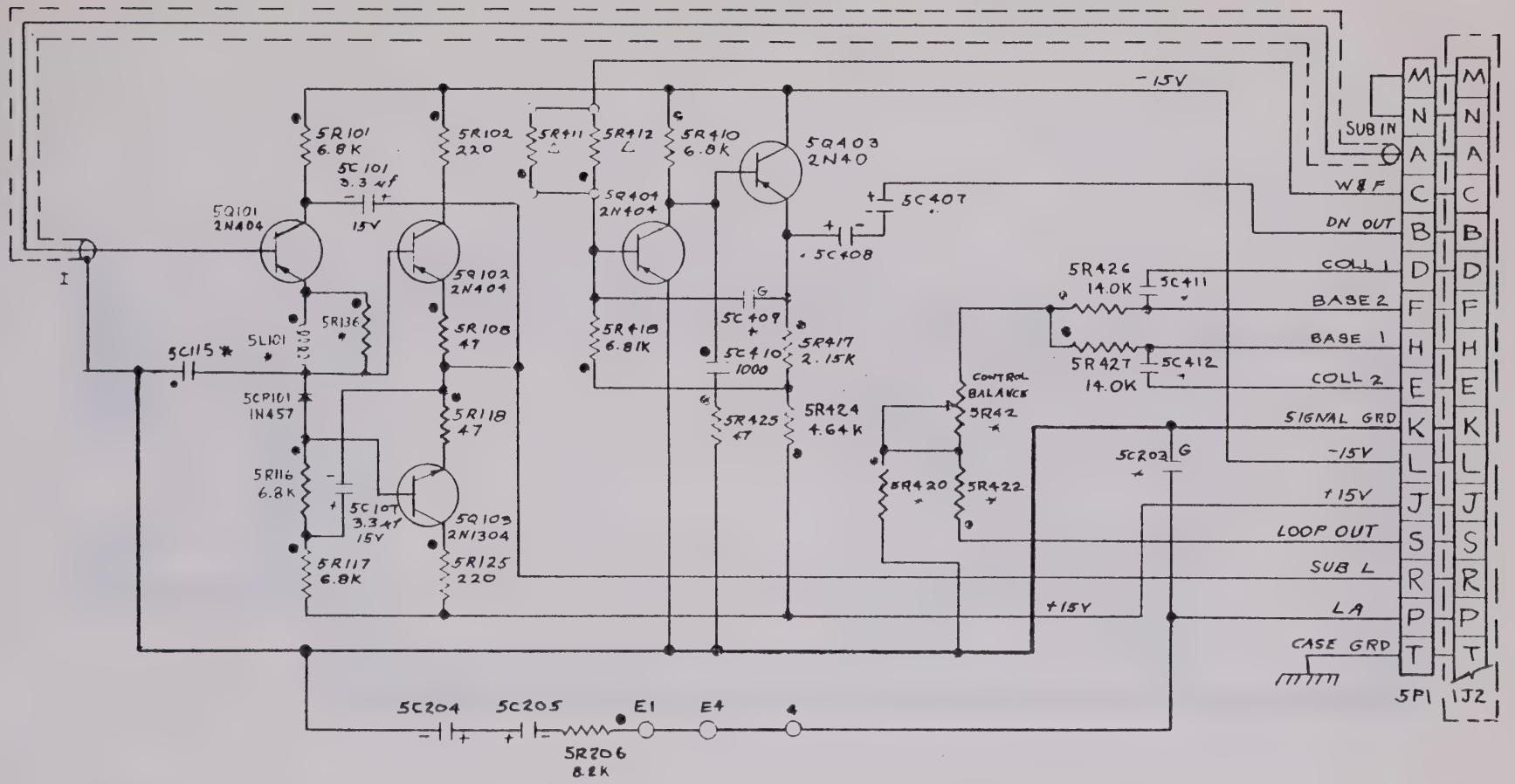


NOTES:

- * Value determined by ordering information.
- Δ Factory adjustment.
- G--Indicates case or outer foil 5C203, 5C409, and signal ground on 5FL101.
- • Indicates dotted component terminal on printed-circuit card.
1. Resistor values in ohms (K=1000).
2. Capacitor values in micro-microfarads, unless otherwise noted.
3. Component numbering series
   100 limiter e.g. 5R107.
   200 phase detector.
   400 voltage-controlled oscillator.
4. EMR Dwg. No. 4881.

Figure 5-23. Schematic Diagram, Model 210B-05 Channel Selector Assembly

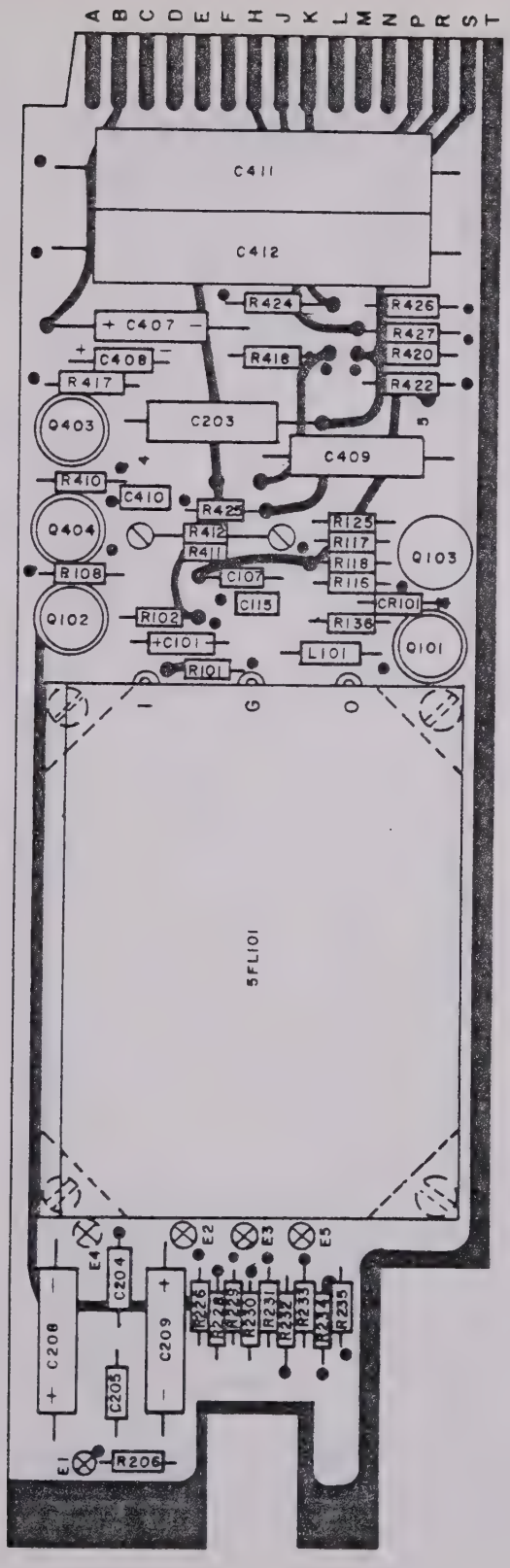


Figure 5-24. Component Locations, Model 210B-02 Printed-Circuit Card Assembly (Below 2.3 Kc)

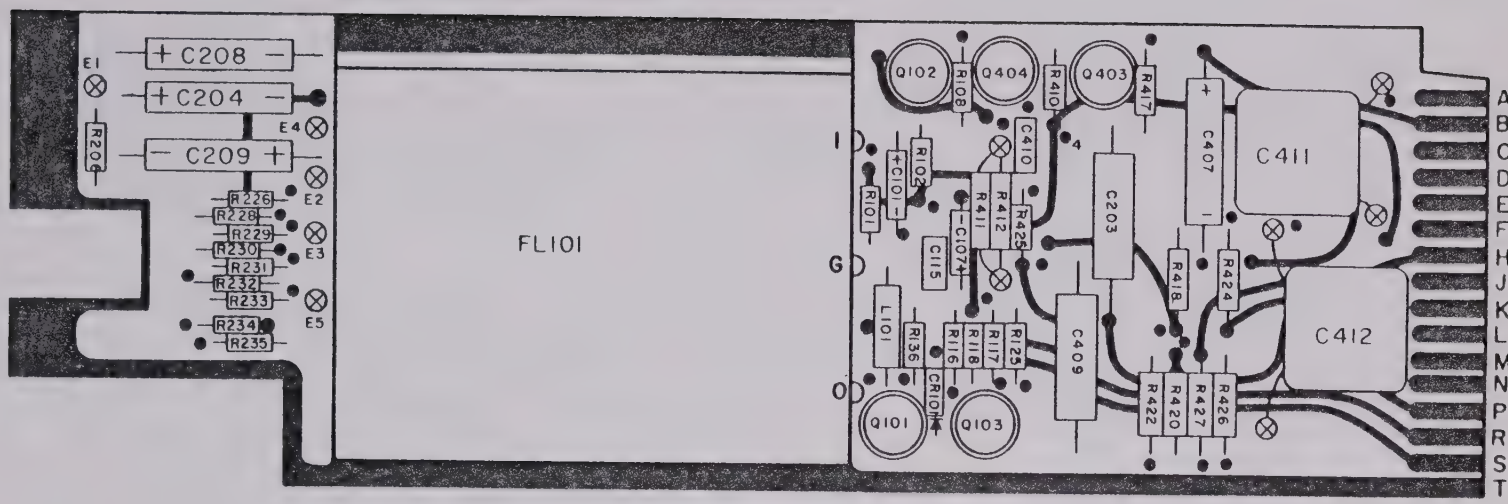


Figure 5-25. Component Locations, Model 210B-02 Printed-Circuit Card Assembly (2.3 Kc and above)

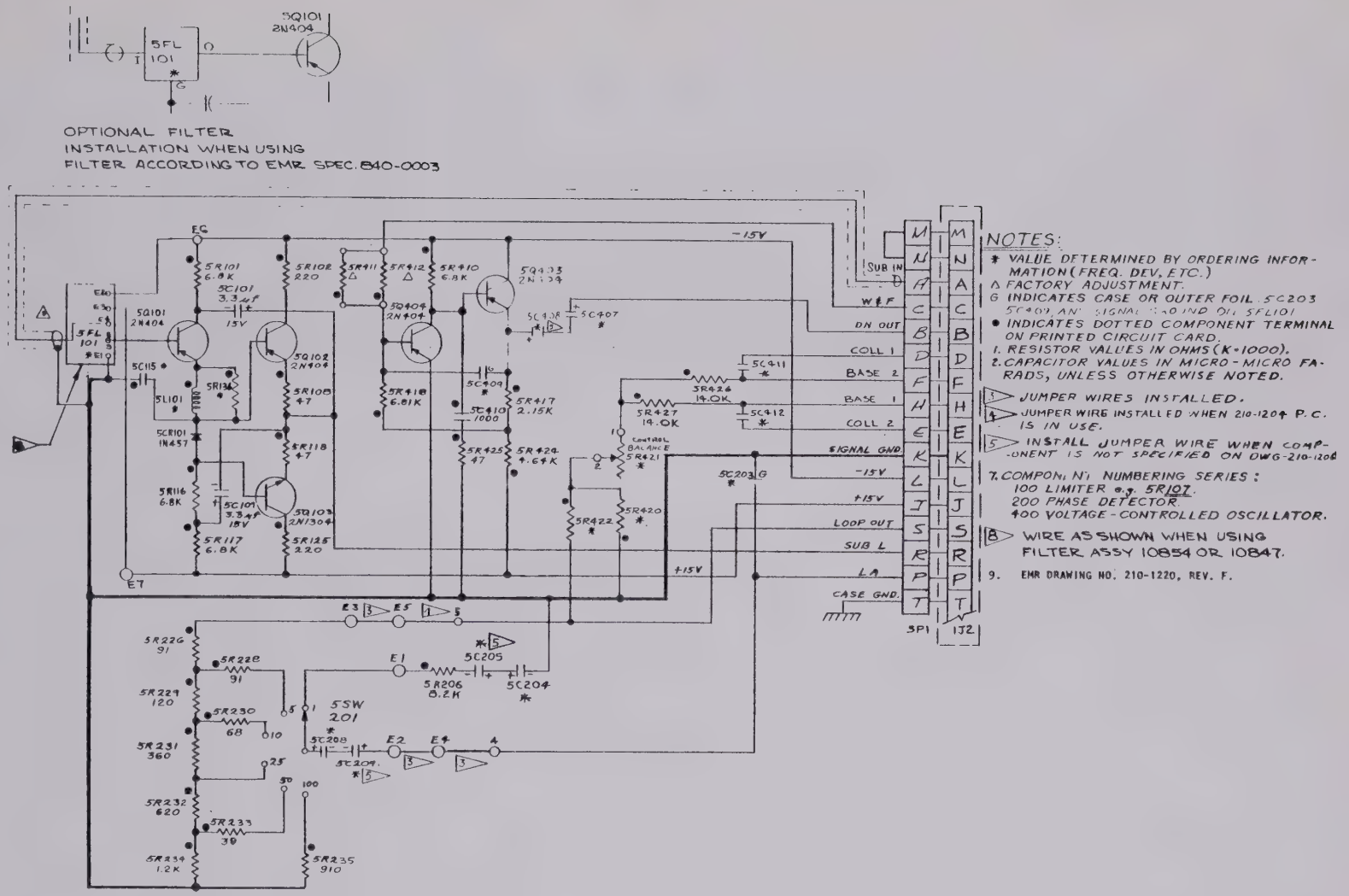


Figure 5-26. Schematic Diagram, Model 210B-02 Channel Selector Assembly

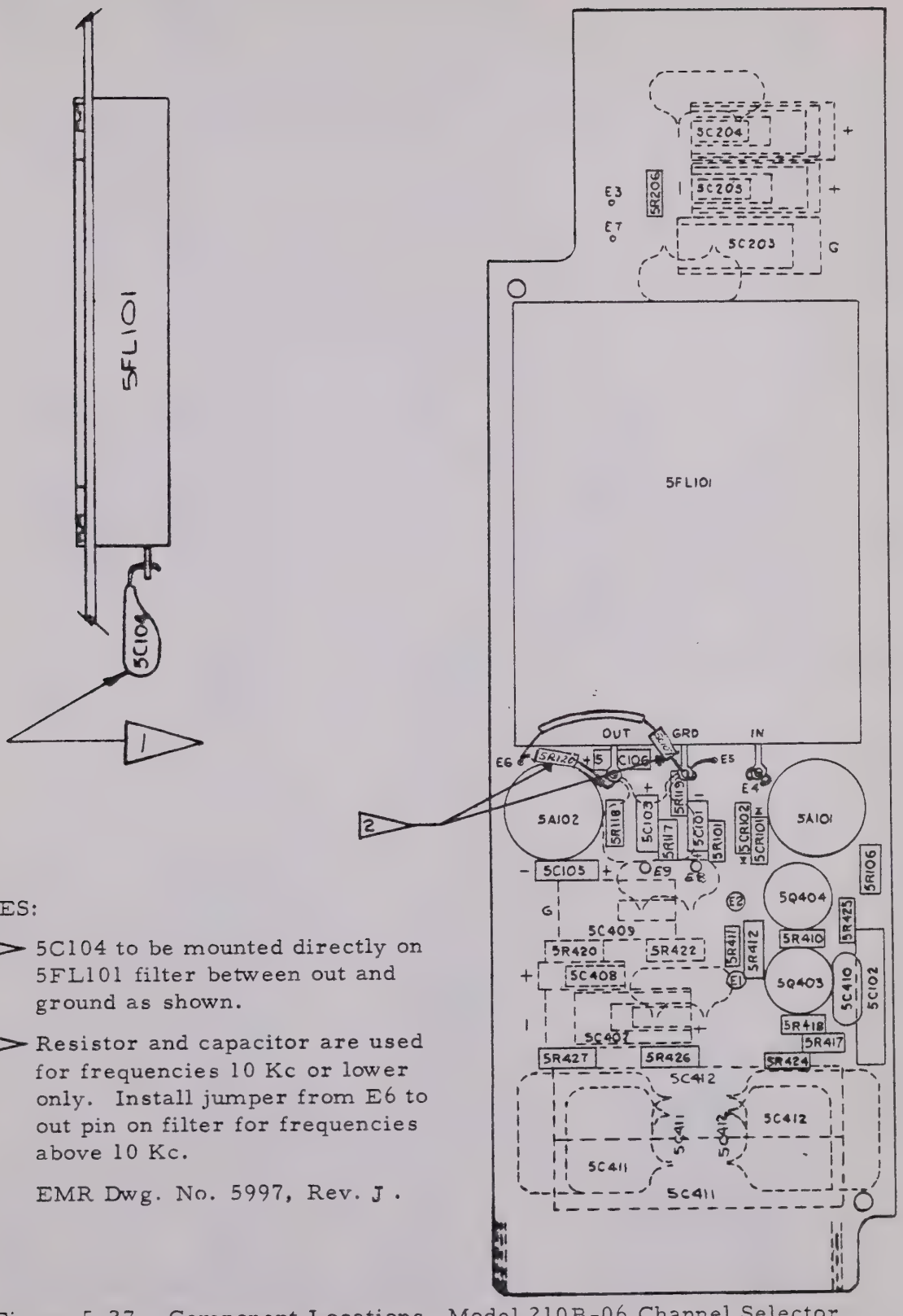


NOTES:

1. 5C104 to be mounted directly on 5FL101 filter between out and ground as shown.
2. Resistor and capacitor are used for frequencies 10 Kc or lower only. Install jumper from E6 to out pin on filter for frequencies above 10 Kc.
3. EMR Dwg. No. 5997, Rev. J .

Figure 5-27. Component Locations, Model 210B-06 Channel Selector Main Printed-Circuit Card Assembly

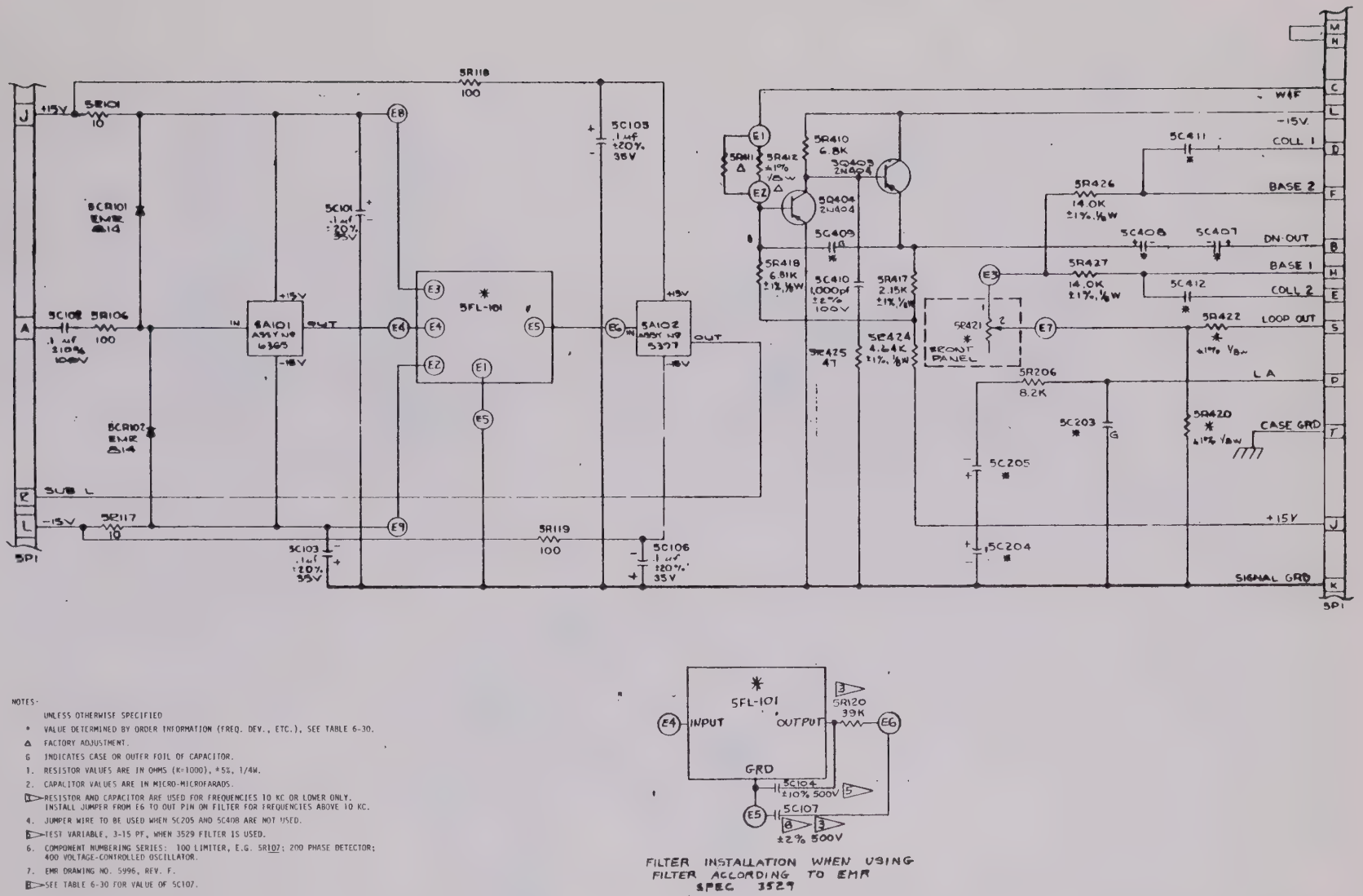


NOTES:

UNLESS OTHERWISE SPECIFIED

* VALUE DETERMINED BY ORDER INFORMATION (FREQ. DEV., ETC.), SEE TABLE 6-30.

Δ FACTORY ADJUSTMENT.

G INDICATES CASE OR OUTER FOIL OF CAPACITOR.

1. RESISTOR VALUES ARE IN OHMS (K=1000), ±5%, 1/4W.
2. CAPACITOR VALUES ARE IN MICRO-MICROFARADS.

3 RESISTOR AND CAPACITOR ARE USED FOR FREQUENCIES 10 KC OR LOWER ONLY. INSTALL JUMPER FROM E6 TO OUT PIN ON FILTER FOR FREQUENCIES ABOVE 10 KC.

4. JUMPER WIRE TO BE USED WHEN 5C205 AND 5C408 ARE NOT USED.

5 TEST VARIABLE, 3-15 PF, WHEN 3529 FILTER IS USED.

6. COMPONENT NUMBERING SERIES: 100 LIMITER, E.G. 5R107; 200 PHASE DETECTOR; 400 VOLTAGE-CONTROLLED OSCILLATOR.
7. EMR DRAWING NO. 5996, REV. F.

8 SEE TABLE 6-30 FOR VALUE OF 5C107.




FILTER INSTALLATION WHEN USING FILTER ACCORDING TO EMR SPEC 3529

Figure 5-28. Schematic Diagram, Model 210B-06 Channel Selector Assembly

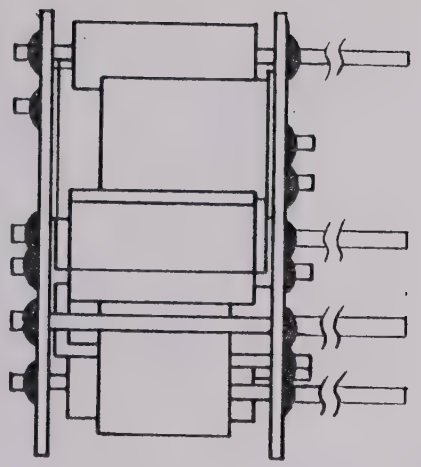

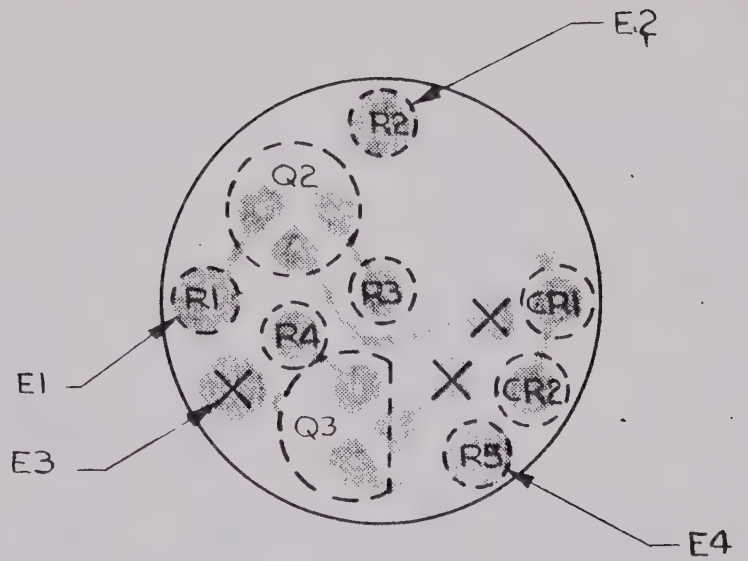


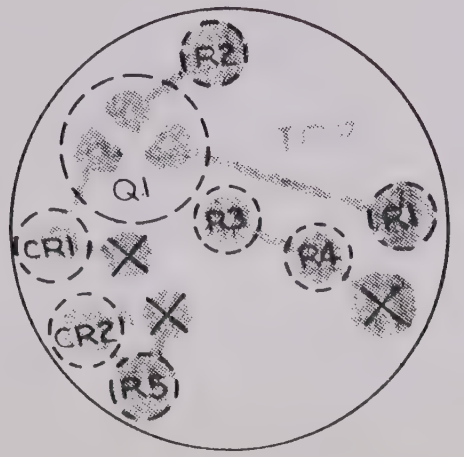


NOTE:

1. EMR Dwg. No. 5397, Rev. O.

Figure 5-29. Component Locations, Follower No. 1 Printed-Wiring-Module Assembly (Used on Models 210B-06 and 210B-07)

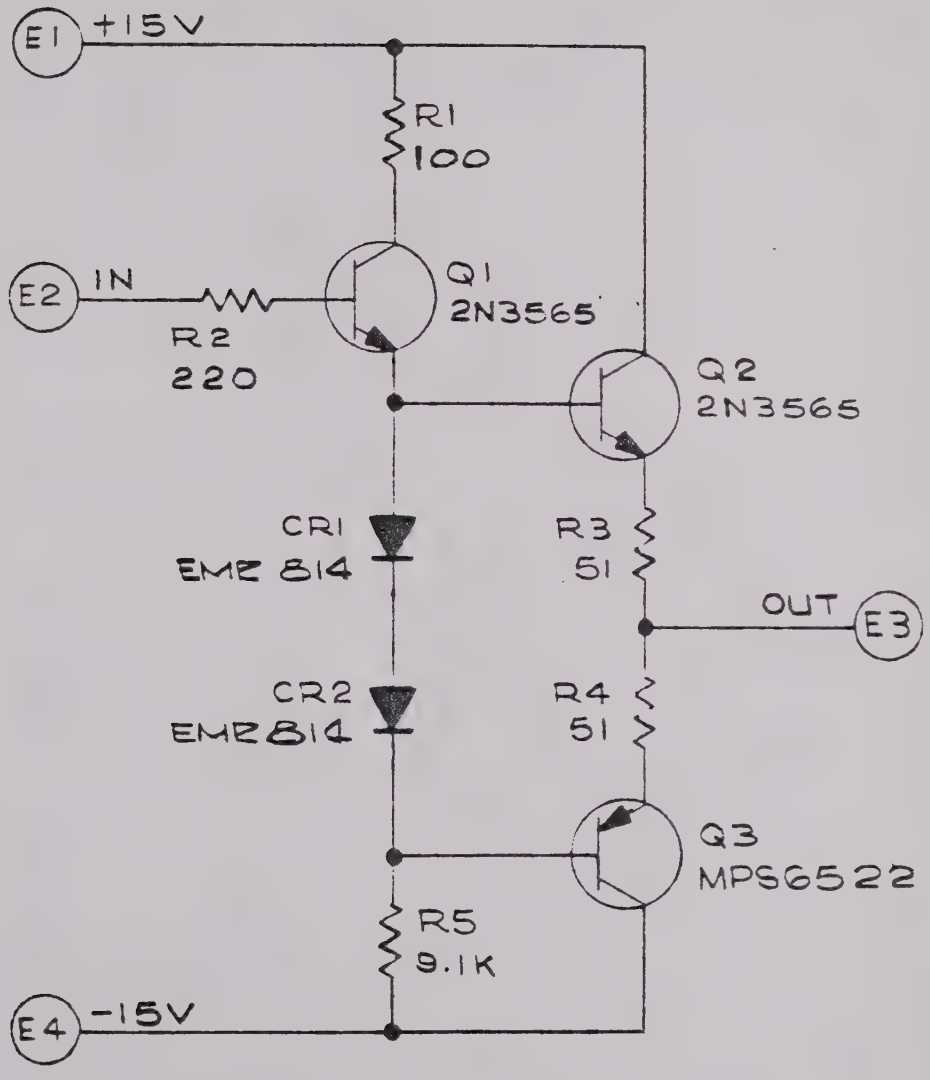


NOTES:

Unless otherwise specified:

1. All resistor values are in ohms (K=1000 ±5%, 1/4W.
2. EMR Dwg. No. 5394, Rev. O.

Figure 5-30. Schematic Diagram,
Follower No. 1 Printed-Wiring-Module Assembly
(Used on Models 210B-06 and 210B-07)

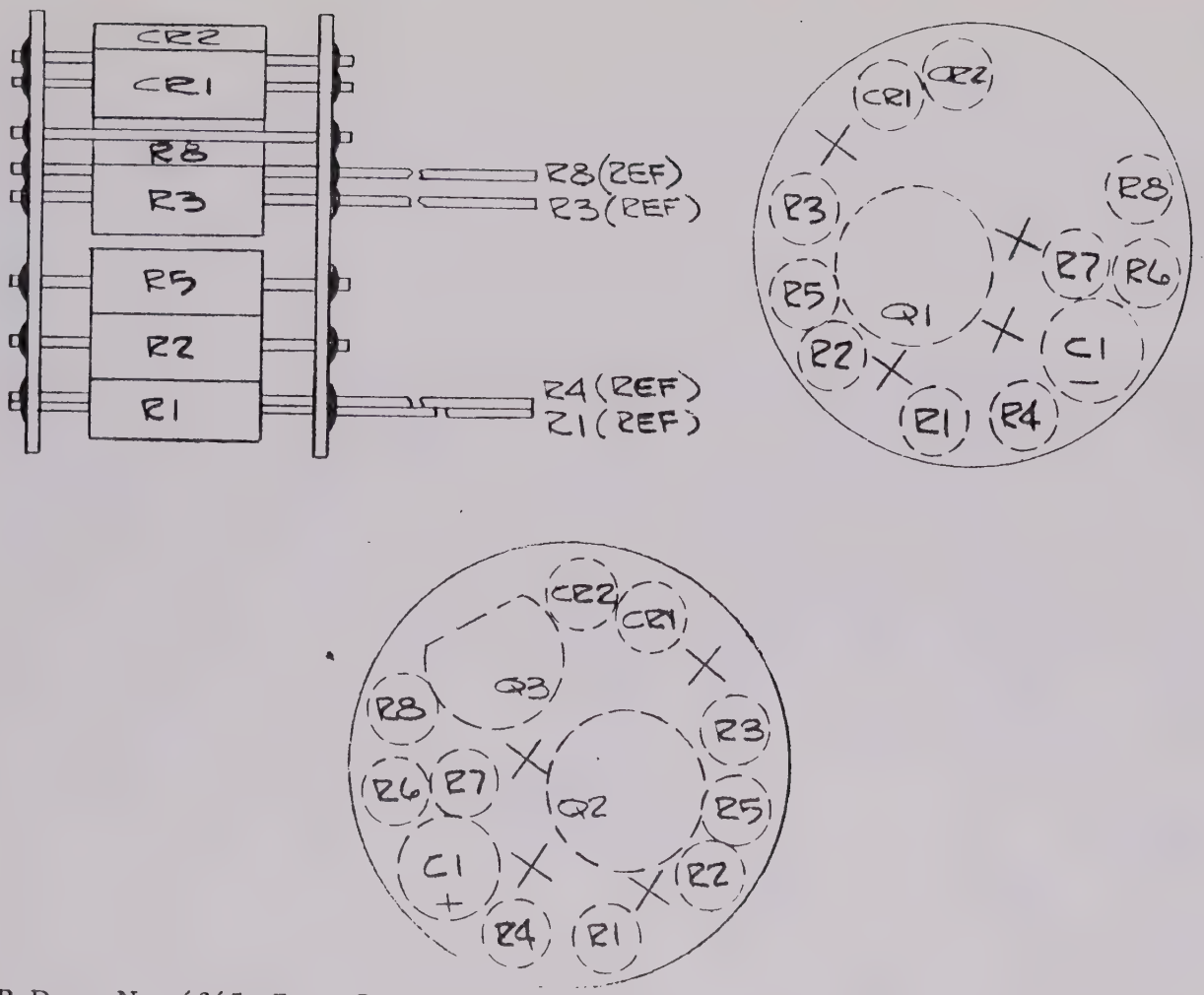


NOTE:

1. EMR Dwg. No. 6365, Rev. O.

Figure 5-31. Component Locations, Follower No. 2 Printed-Wiring-Module Assembly (Used on Models 210B-06, 210B-07, 210T-06, 210T-07, and 210T-08)

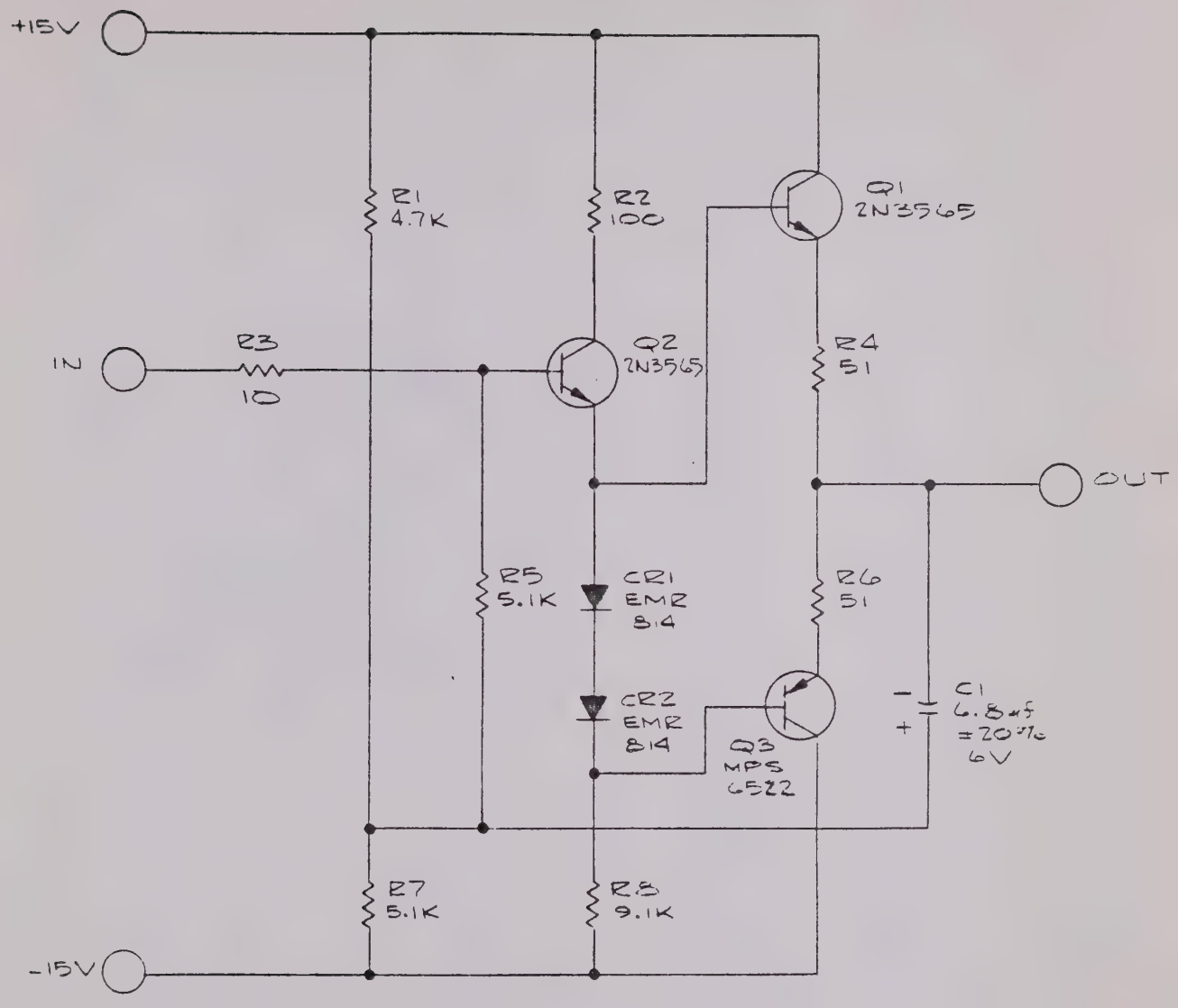


NOTES:
Unless otherwise specified:
1. All resistor values are in ohms (K=1000) ±5%, 1/4W.
2. EMR Dwg. No. 6367, Rev. O.

Figure 5-32. Schematic Diagram, Follower No. 2 Printed-Wiring-Module Assembly (Used on Models 210B-06, 210B-07, 210T-06, 210T-07, and 210T-08)

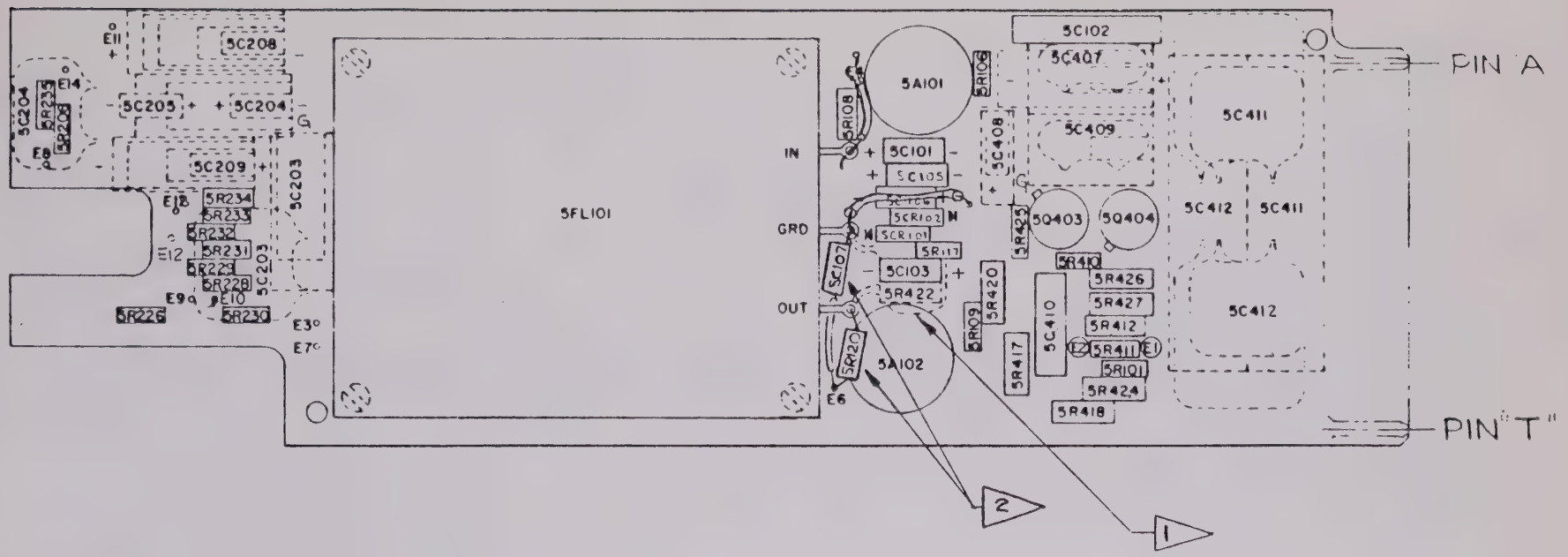


NOTES:

1. 5C104 to be mounted directly on 5FL101 filter between out and ground as shown.
2. Resistor and capacitor are used for frequencies 10 Kc or lower only. Install jumper from E6 to out pin on filter for frequencies above 10 Kc.
3. EMR Dwg. No. 5609, Rev. B.

Figure 5-33. Component Locations, Model 210B-07 Channel Selector Printed-Circuit-Card Assembly

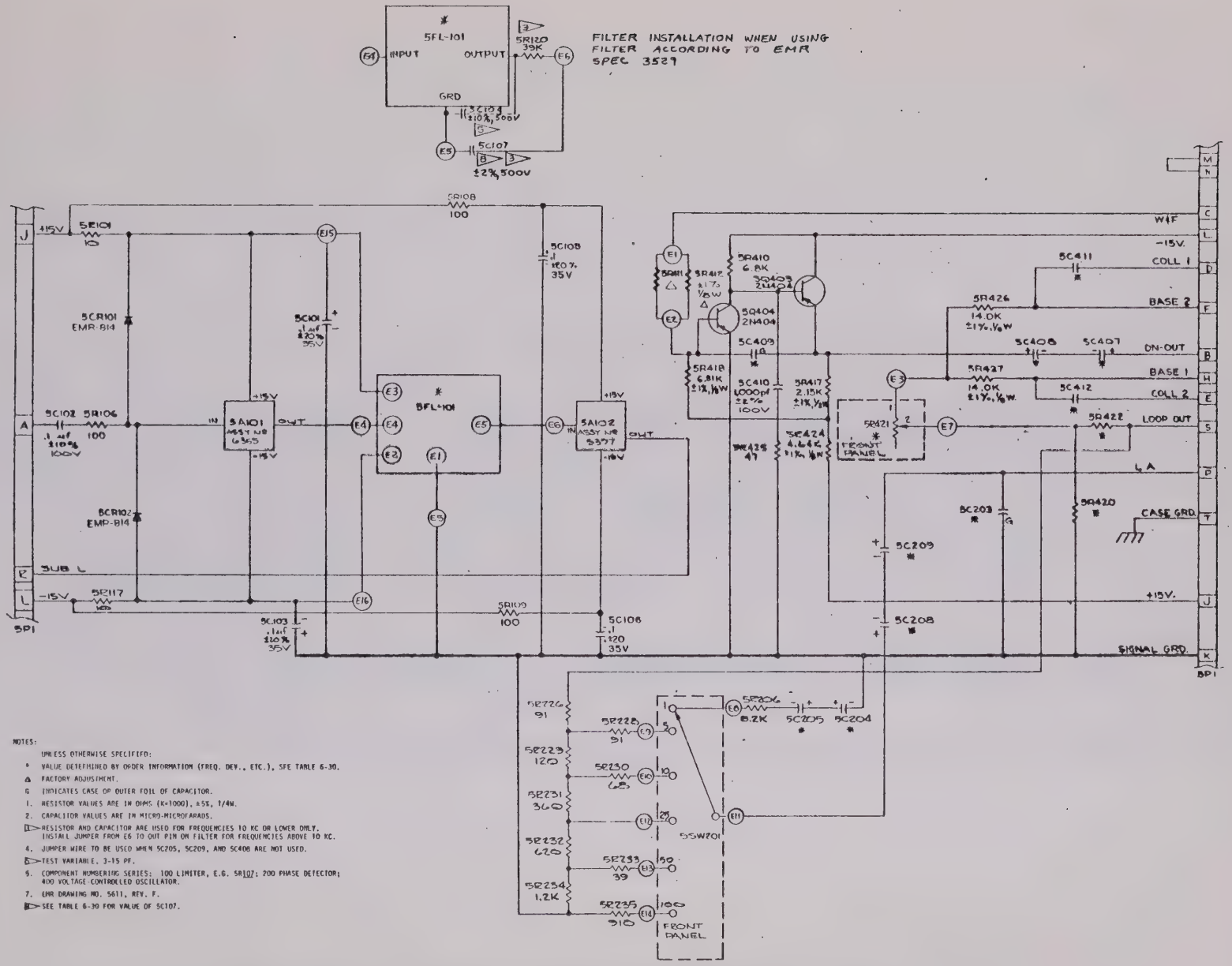


Figure 5-34. Schematic Diagram, Model 210B-07 Channel Selector Printed-Wiring Board Assembly

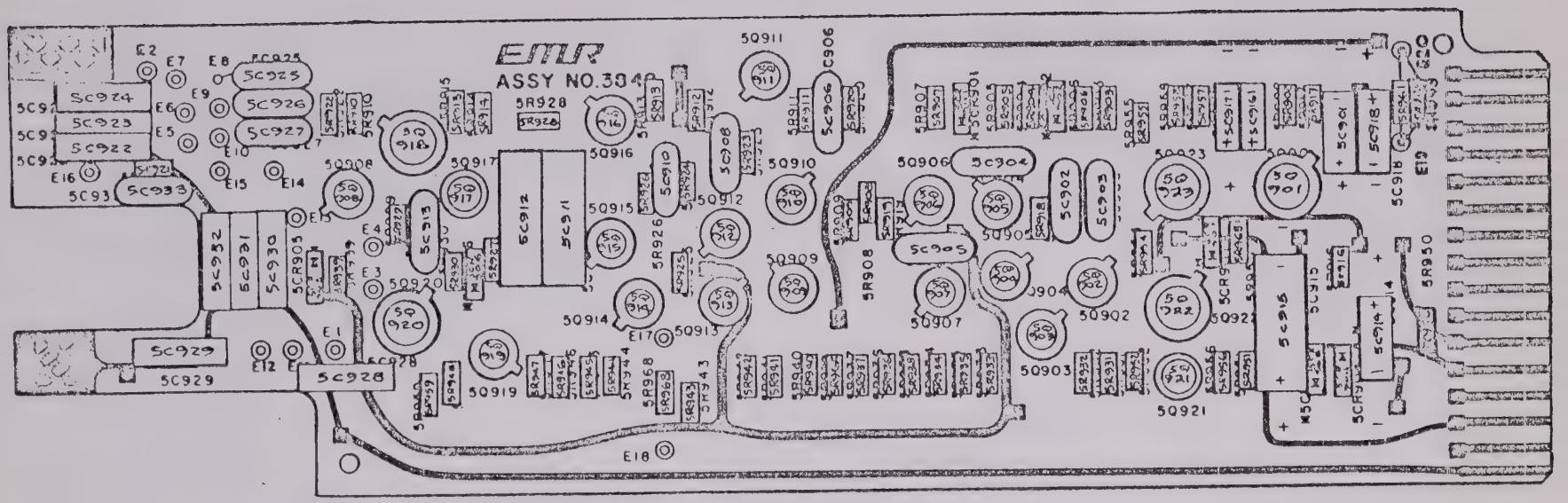


Note:

1. EMR Dwg. No. 3848, Rev. B.

Figure 5-35. Component Locations, Model 210B-11 Channel Selector Printed-Wiring-Board Assembly

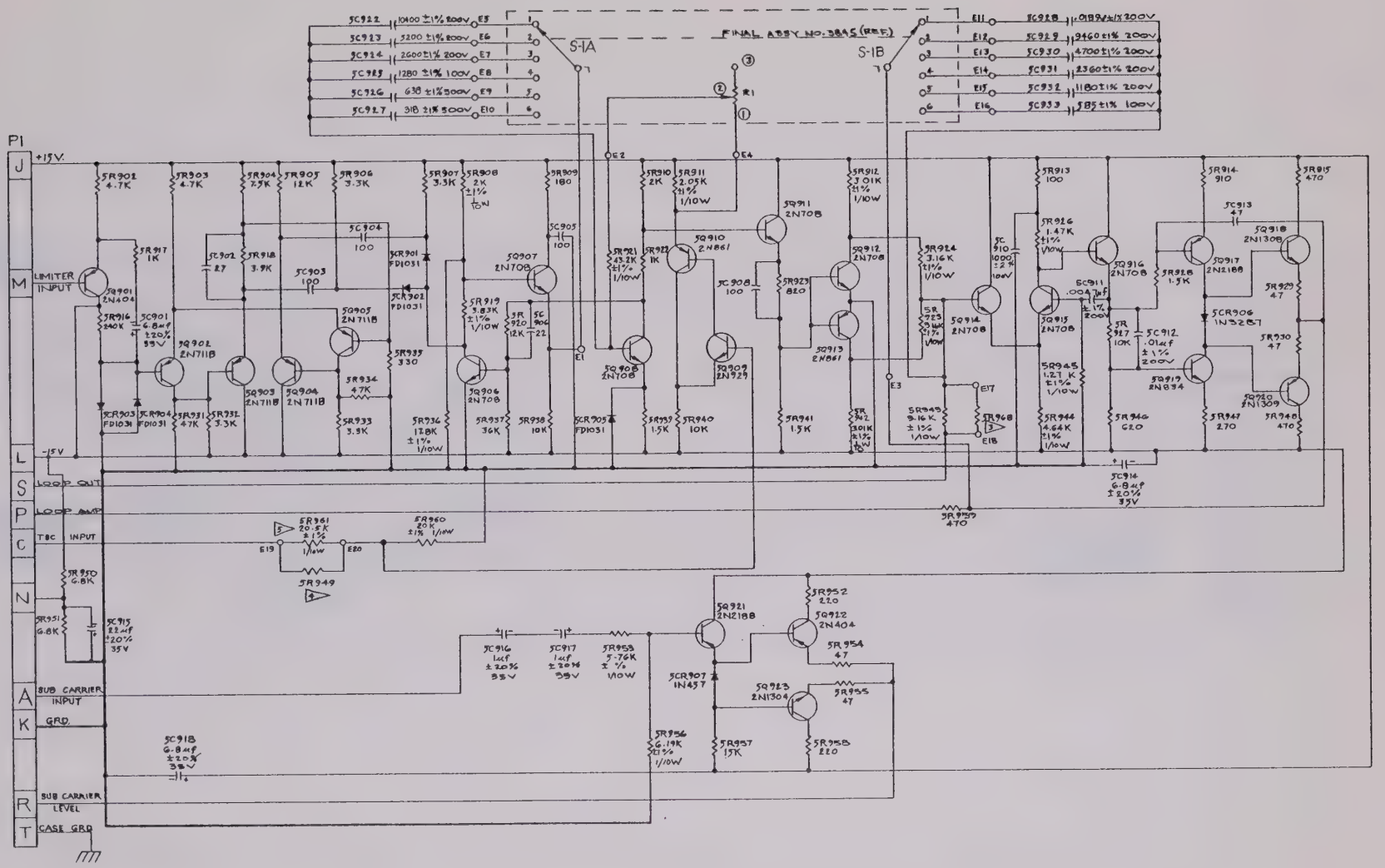


NOTES:
Unless otherwise specified
1. All resistor values are in ohms (K=1000) ±5%, 1/4W.
2. All capacitor values are in Mf ±2%, 500V.
3. Test variable, 1/4W CB min. value to be 5x5R943.
4. Test variable (trimmer).
5. Test variable (nominal value).
6. EMR Dwg. No. 3849, Rev. O.

Figure 5-36. Schematic Diagram, Model 210B-11 Channel Selector Printed-Wiring-Board Assembly

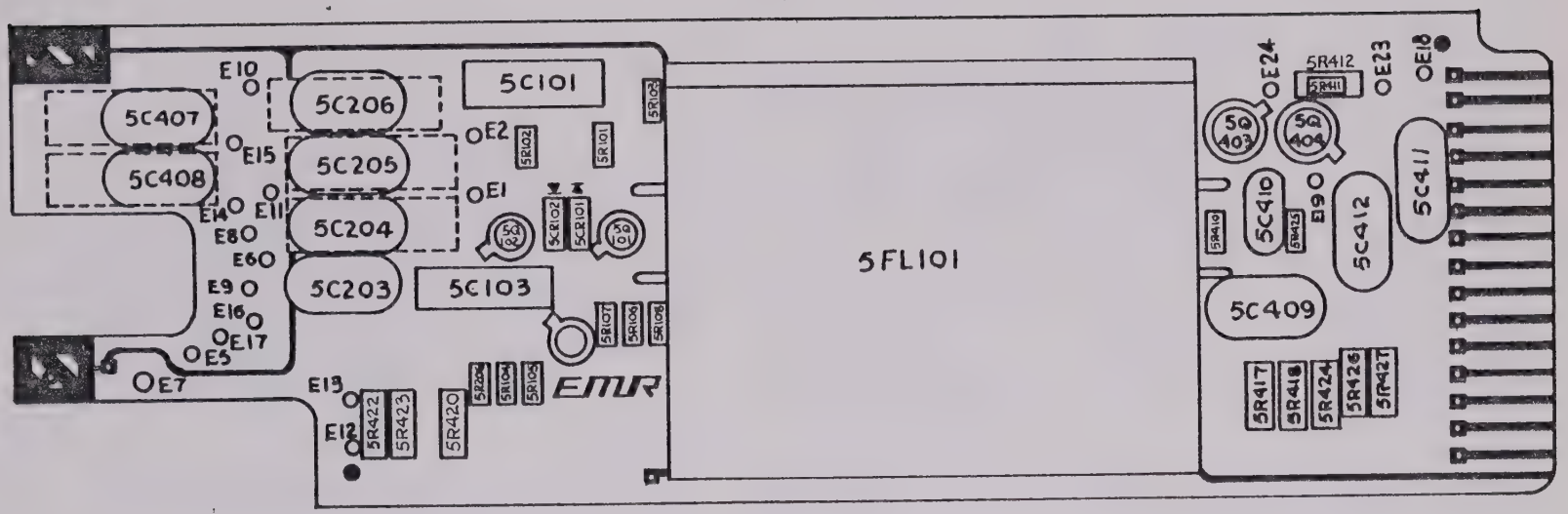


NOTE:

1. EMR Dwg. No. 4674, Rev. A.

Figure 5-37. Component Locations, Model 210B-21 Dual-Deviation Band-Pass Input Filter (BPIF) Printed-Wiring-Board Assembly

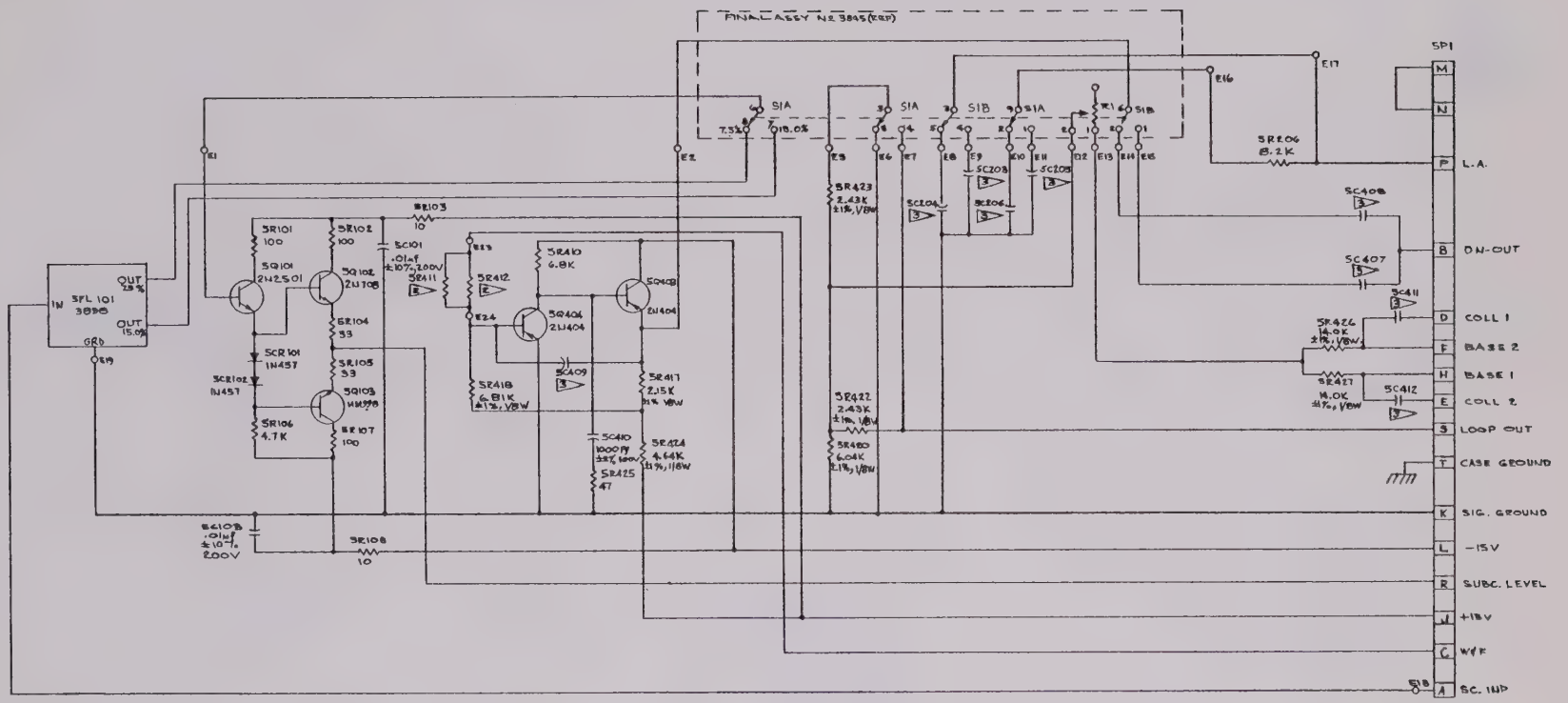


NOTES
Unless otherwise specified
1. All resistors are in ohms (K-1000) ±5%, 1/4W.
2. Trst variable.
3. Freq. variable.
4. EMR Dwg. No. 4671, Rev. O.

Figure 5-38. Schematic Diagram, Model 210B-21 Dual-Deviation Band-Pass Input Filter (BPIF) Printed-Wiring-Board Assembly

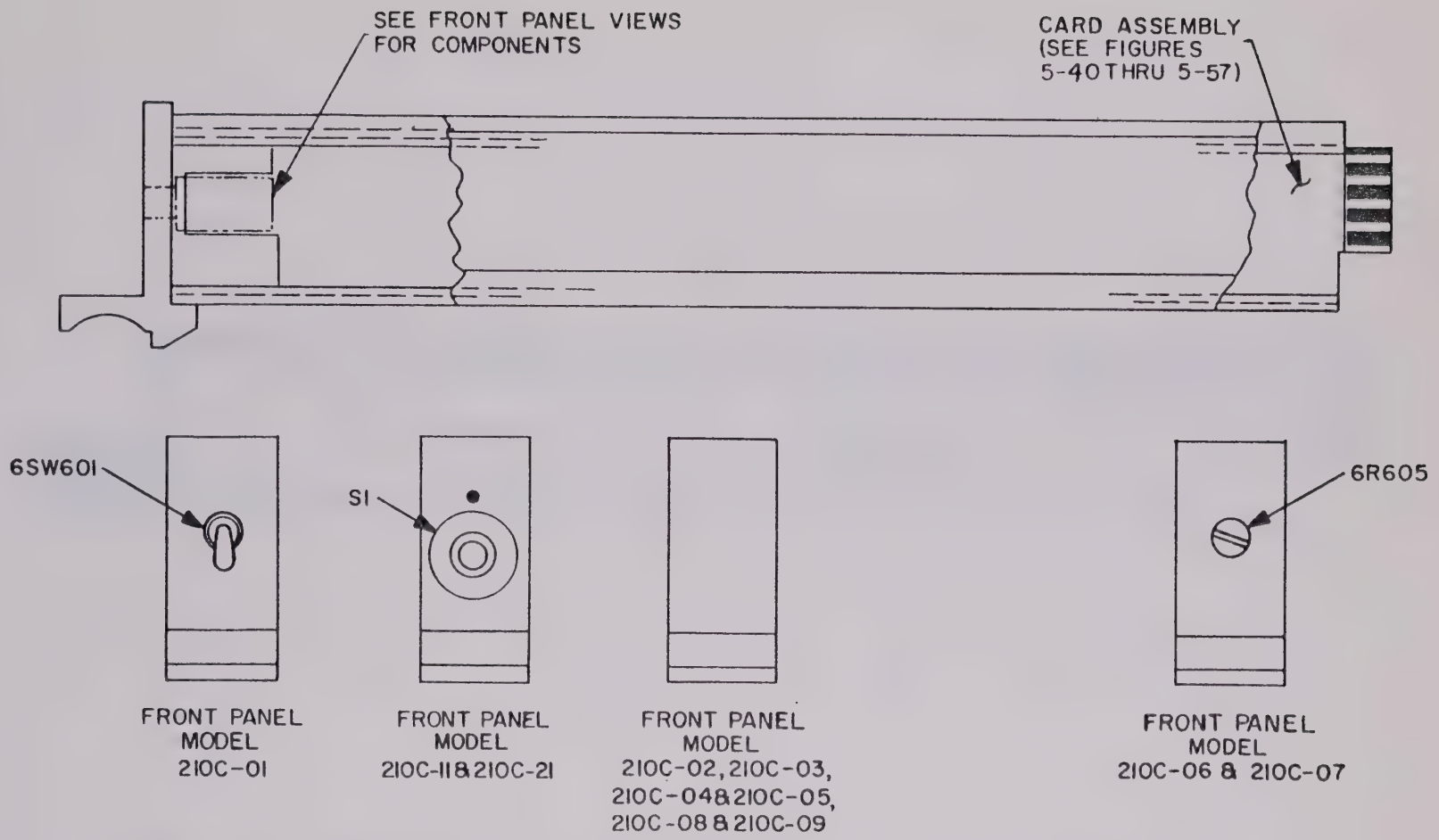


Figure 5-39. Model 210C Output Filter Assembly

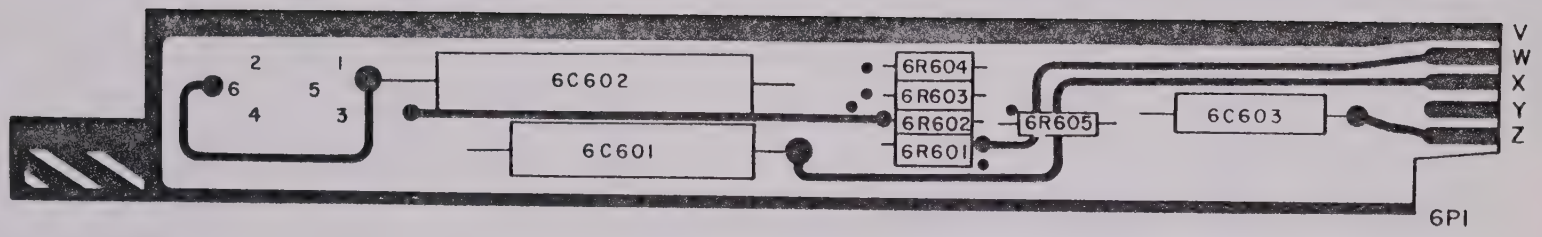


Figure 5-40. Component Locations, Models 210C-01, 210C-02 and 210C-03 Printed-Circuit Card Assemblies

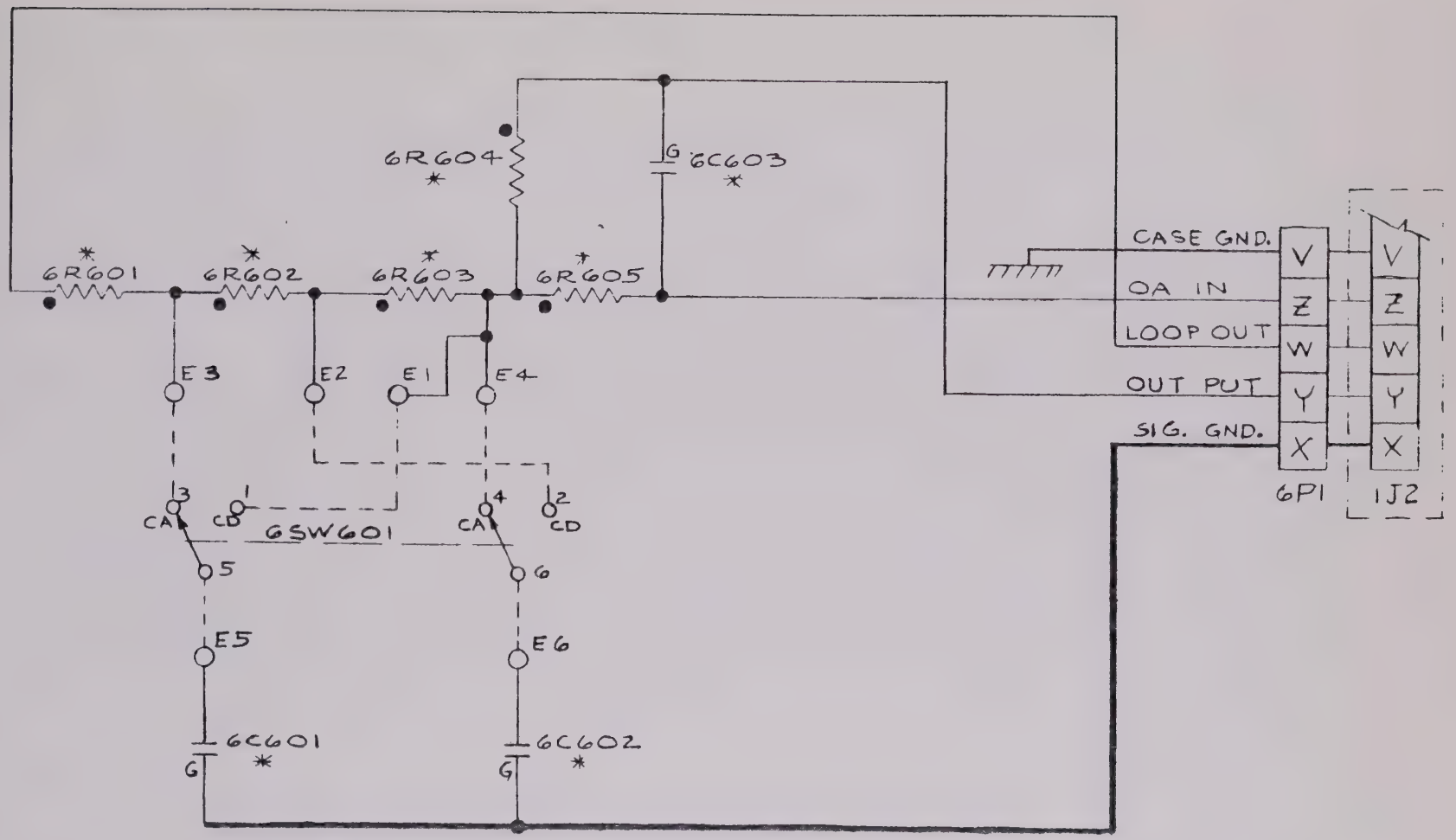


NOTES:

* VALUE DETERMINED BY ORDERING INFORMATION (FREQ, ETC.).

G. INDICATES CASE OR OUTER FOIL OF CAPACITOR.

● INDICATES DOTTED COMPONENT TERMINAL ON PRINTED CIRCUIT CARD.

--- DOTTED LINES INDICATE WIRE JUMPERS.

Figure 5-41. Schematic Diagram, Model 210C-01 Output Filter Assembly

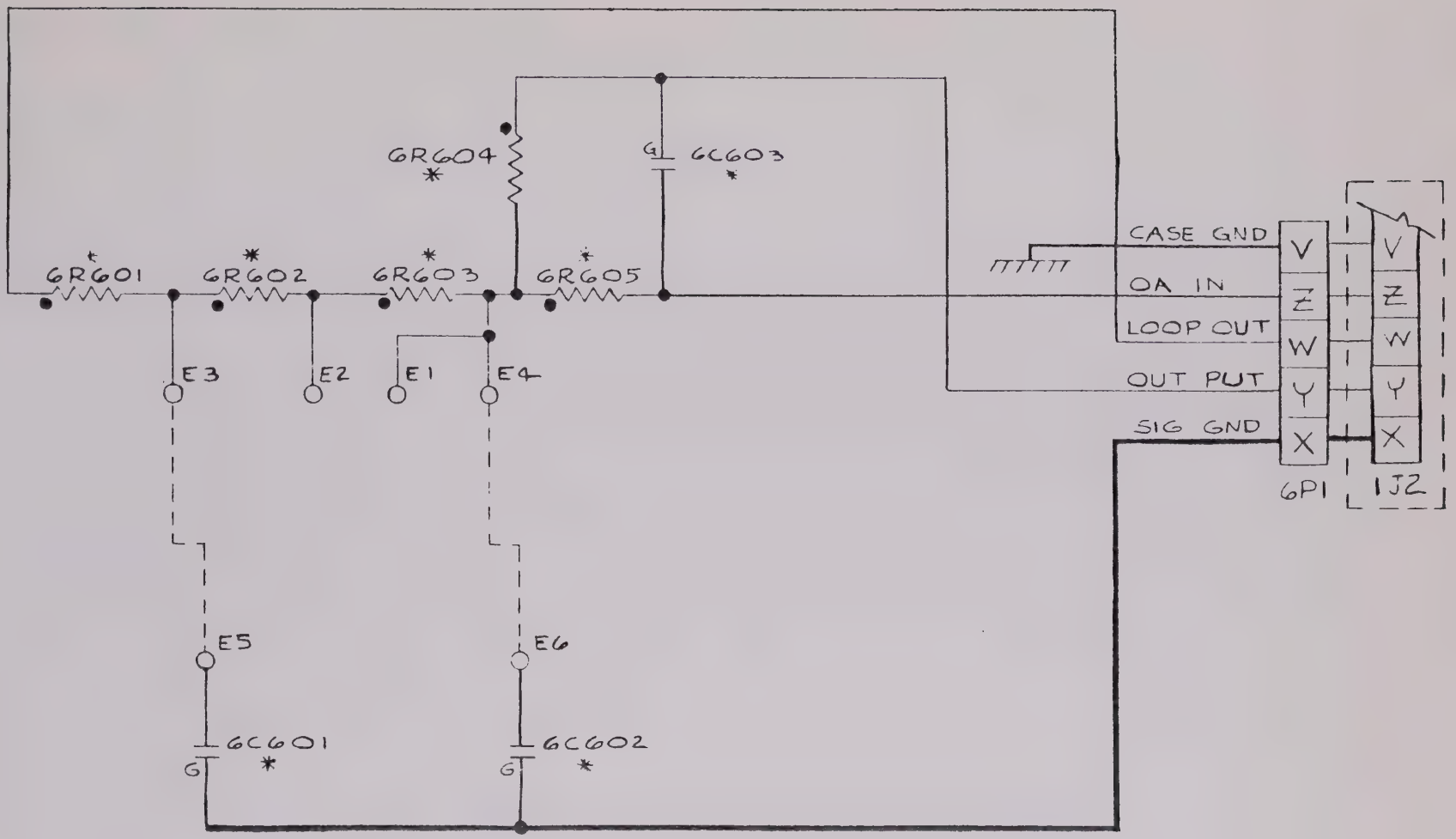


NOTES:

* VALUE DETERMINED BY ORDERING INFORMATION (FREQ, ETC.).

G INDICATES CASE OR OUTER FOIL OF CAPACITOR.

• INDICATES DOTTED COMPONENT TERMINAL ON PRINTED CIRCUIT CARD.

--- DOTTED LINES INDICATE WIRE JUMPERS.

Figure 5-42. Schematic Diagram, Model 210C-02 Output Filter Assembly

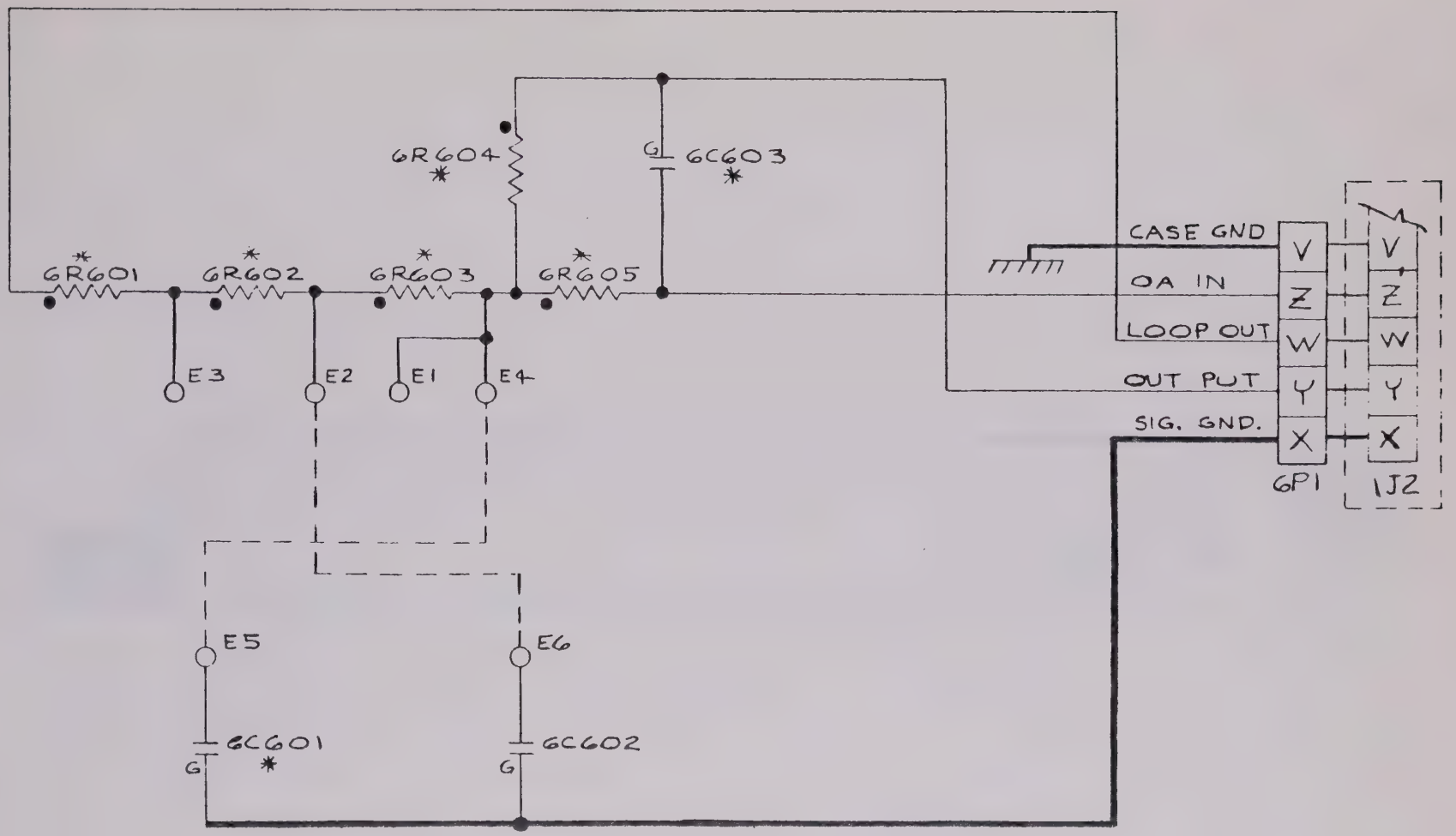


NOTES:

* VALUE DETERMINED BY ORDERING INFORMATION (FREQ, ETC.).

G INDICATES CASE OR OUTER FOIL OF CAPACITOR.

● INDICATES DOTTED COMPONENT TERMINAL ON PRINTED CIRCUIT CARD.

--- DOTTED LINES INDICATE WIRE JUMPERS.

Figure 5-43. Schematic Diagram, Model 210C-03 Output Filter Assembly

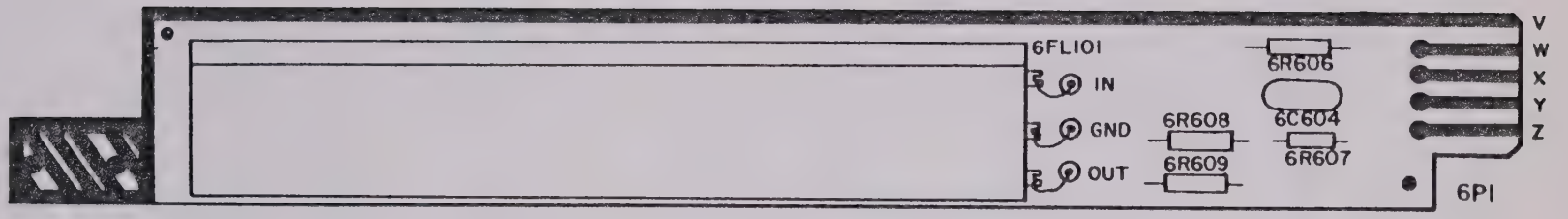


Figure 5-44. Component Locations, Models 210C-04 and 210C-05 Printed-Circuit Card Assemblies

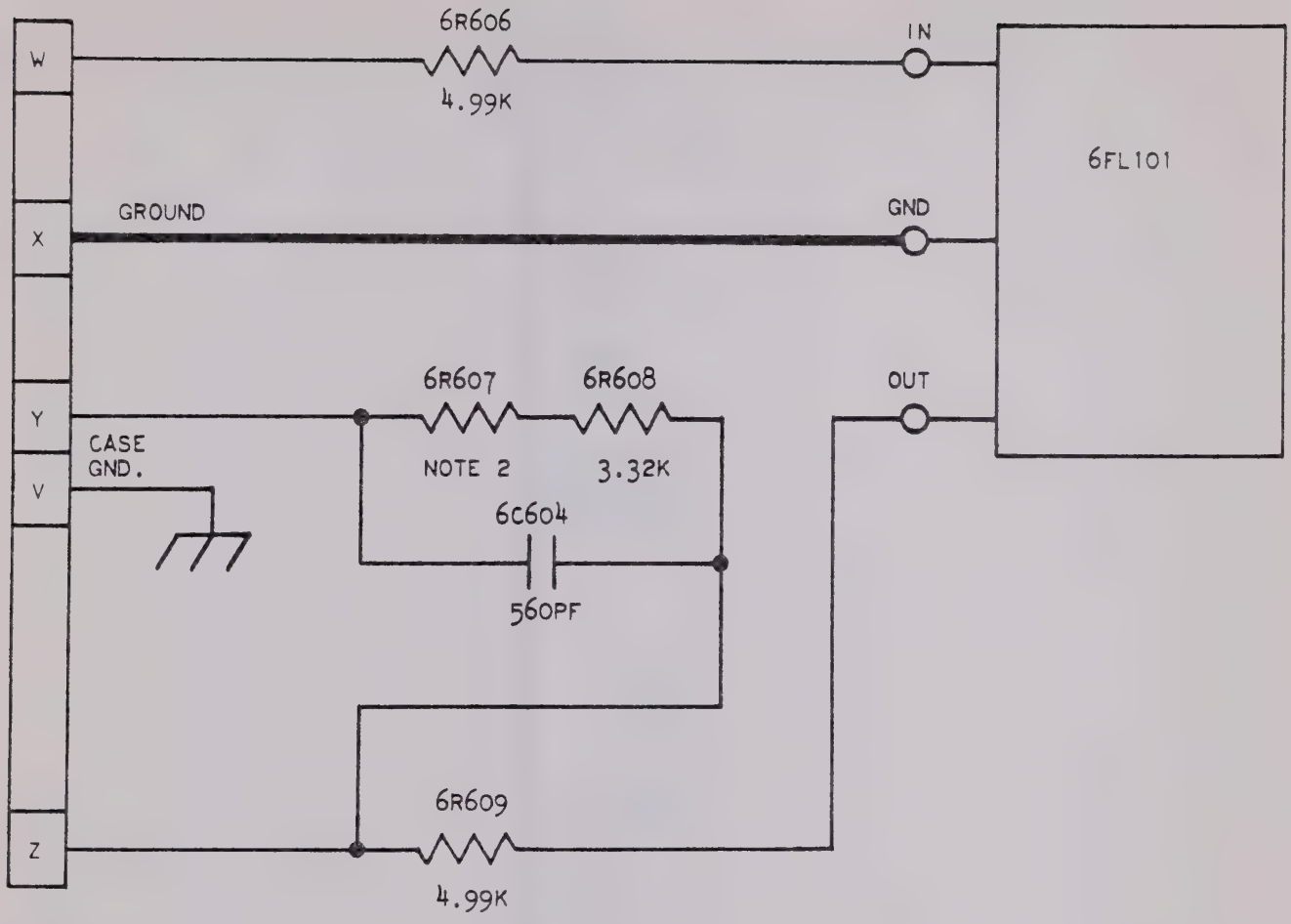


NOTES:

1. ALL RESISTOR VALUES ARE IN OHMS (K = 1000) UNLESS OTHERWISE NOTED.

2. 1/3 DC RESISTANCE OF FILTER.

3. 210C-04, 6R608 = 3.32K FOR FREQ. ABOVE 600 C.P.S: FOR FREQ. BELOW 600 CPS. 6R608 = $3.32 + \frac{1.66}{\text{R SHUNT}}$

   (R SERIES +4.99) IN KΩ. R SHUNT = D C RESISTANCE FROM OUTPUT TO GRD. OF FILTER 6 FL101 (KΩ). R SERIES = DC RESISTANCE OF FILTER 6 FL101 (KΩ).
   210C-05, 6R608 = 3.32K

Figure 5-45. Schematic Diagram, Models 210C-04 and 210C-05 Output Filter Assemblies

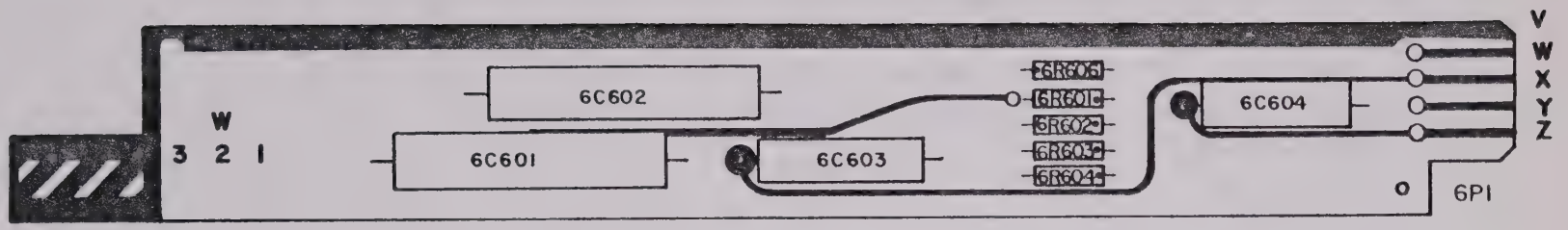


Figure 5-46. Component Locations, Model 210C-06 Printed-Circuit Card Assembly

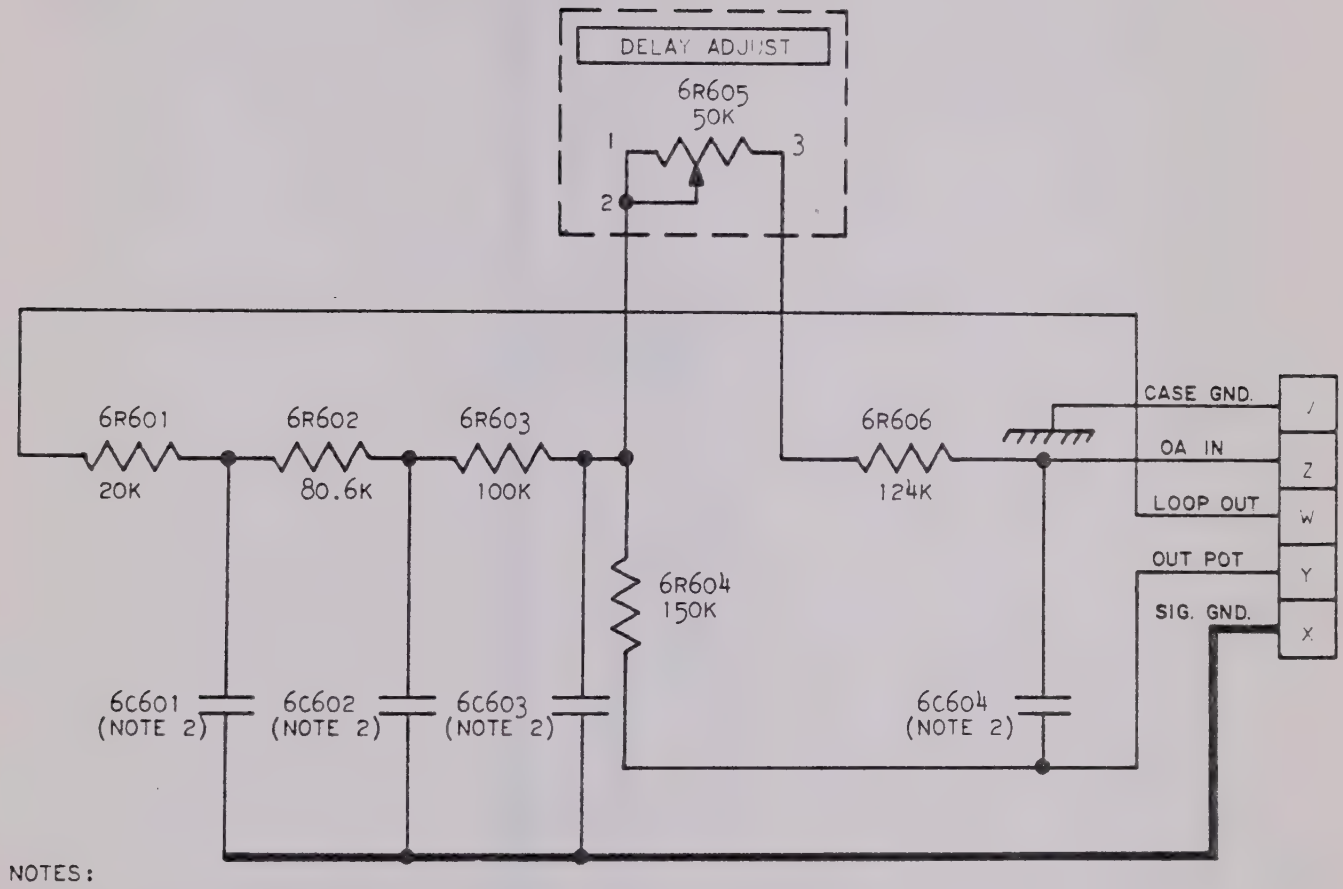


NOTES:

1. ALL RESISTOR VALUES ARE IN OHMS (K = 1000) UNLESS OTHERWISE NOTED.
2. VALUE IS VARIABLE WITH FREQUENCY CHANNEL.

Figure 5-47. Schematic Diagram, Model 210C-06 Output Filter Assembly

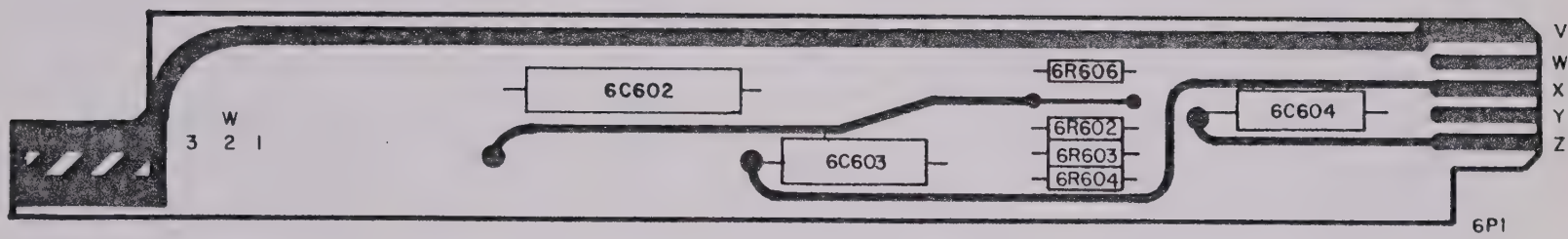


Figure 5-48. Component Locations, Model 210C-07 Printed-Circuit Card Assembly

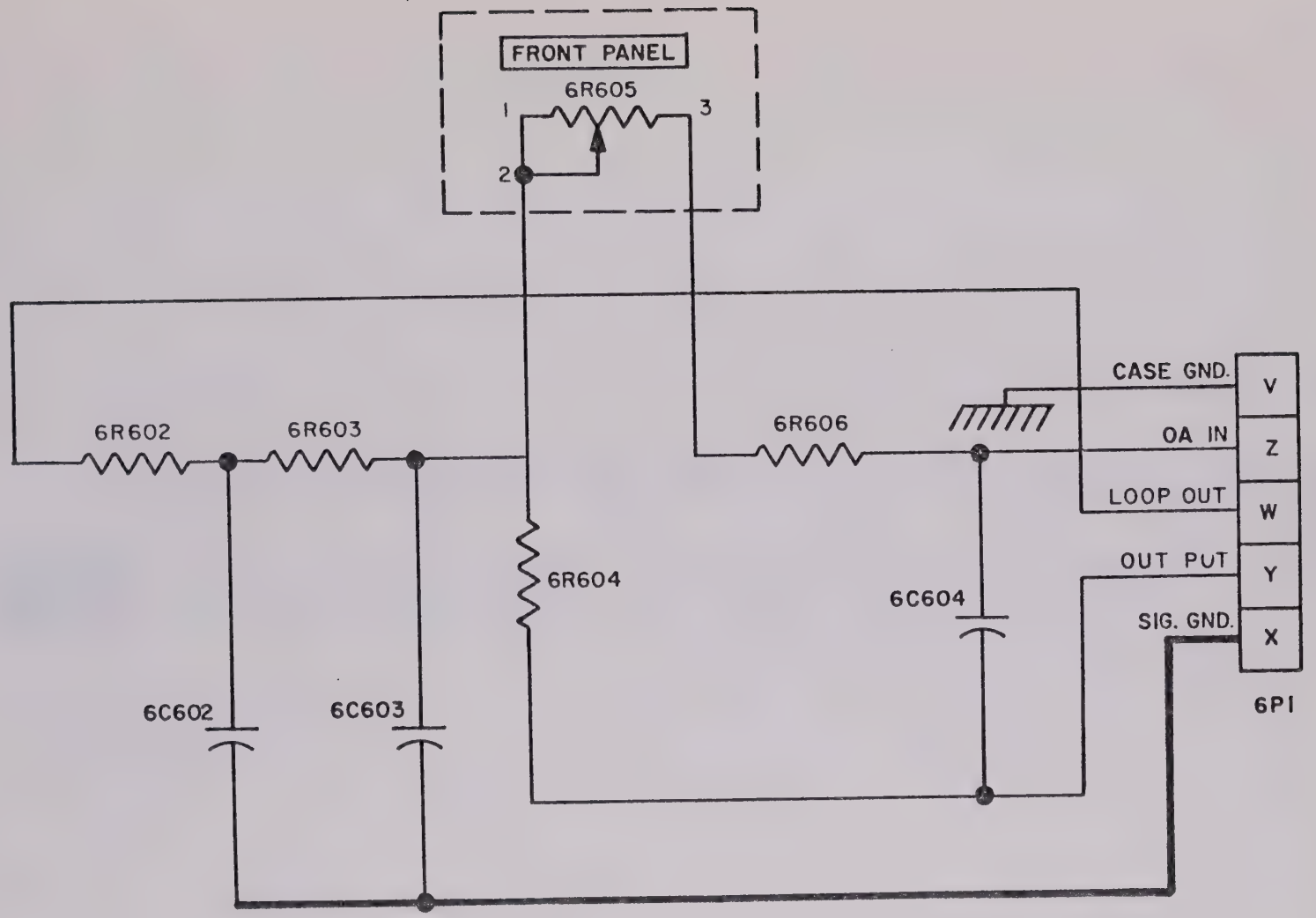


NOTE

1. RESISTOR & CAPACITOR VALUES VARIABLE WITH FREQUENCY CHANNEL. (SEE SECTION 6)
2. EMR DRAWING CONTROL NO. 210-011.

Figure 5-49. Schematic Diagram, Model 210C-07 Output Filter Assembly

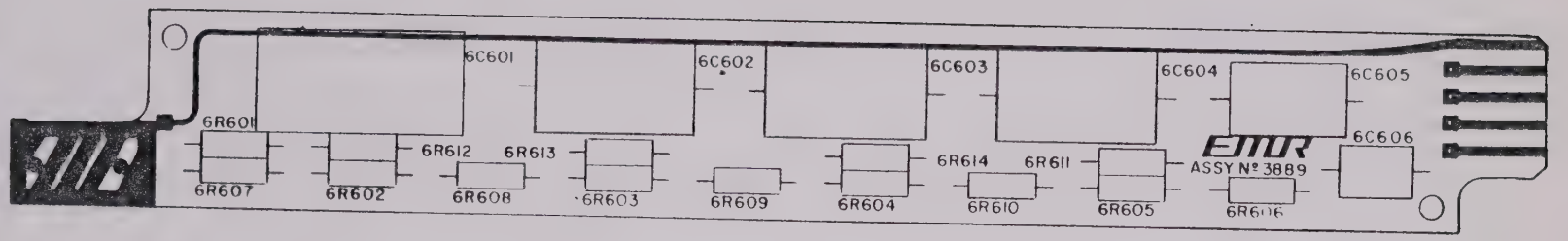


EMR Drawing No. 3889

Figure 5-50. Component Locations, Model 210C-08 Low-Pass Output Filter Printed-Circuit Card Assembly

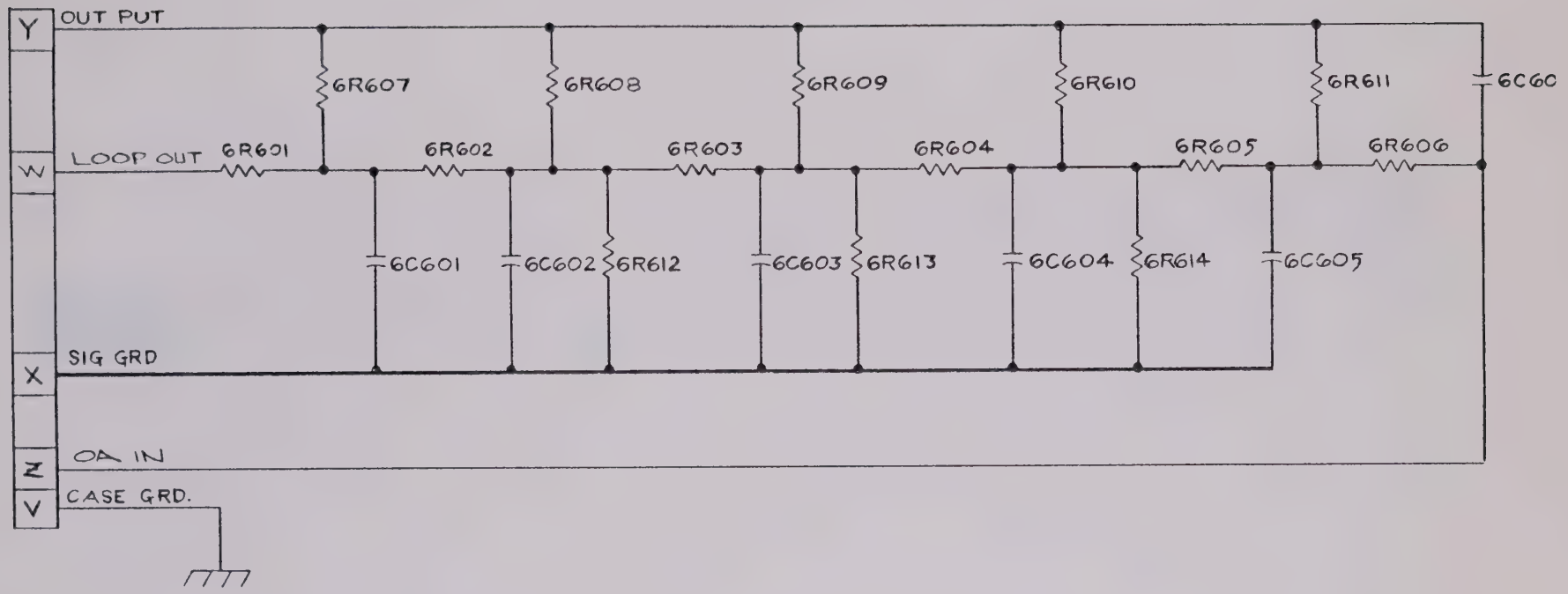


NOTE:
1. EMR Dwg. No. 3887, Rev-0.

Figure 5-51. Schematic Diagram, Model 210C-08 Low-Pass Output Filter Assembly

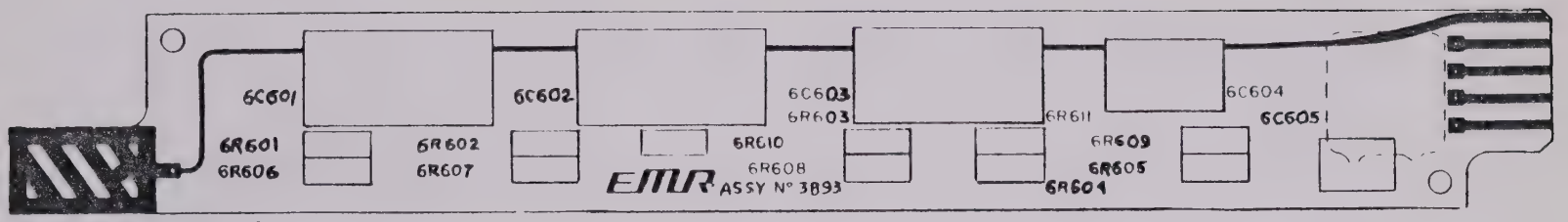


NOTE:

1. EMR Dwg. No. 3893, Rev. O.

Figure 5-52. Component Locations, Model 210C-09 Output Filter Printed-Circuit-Card Assembly

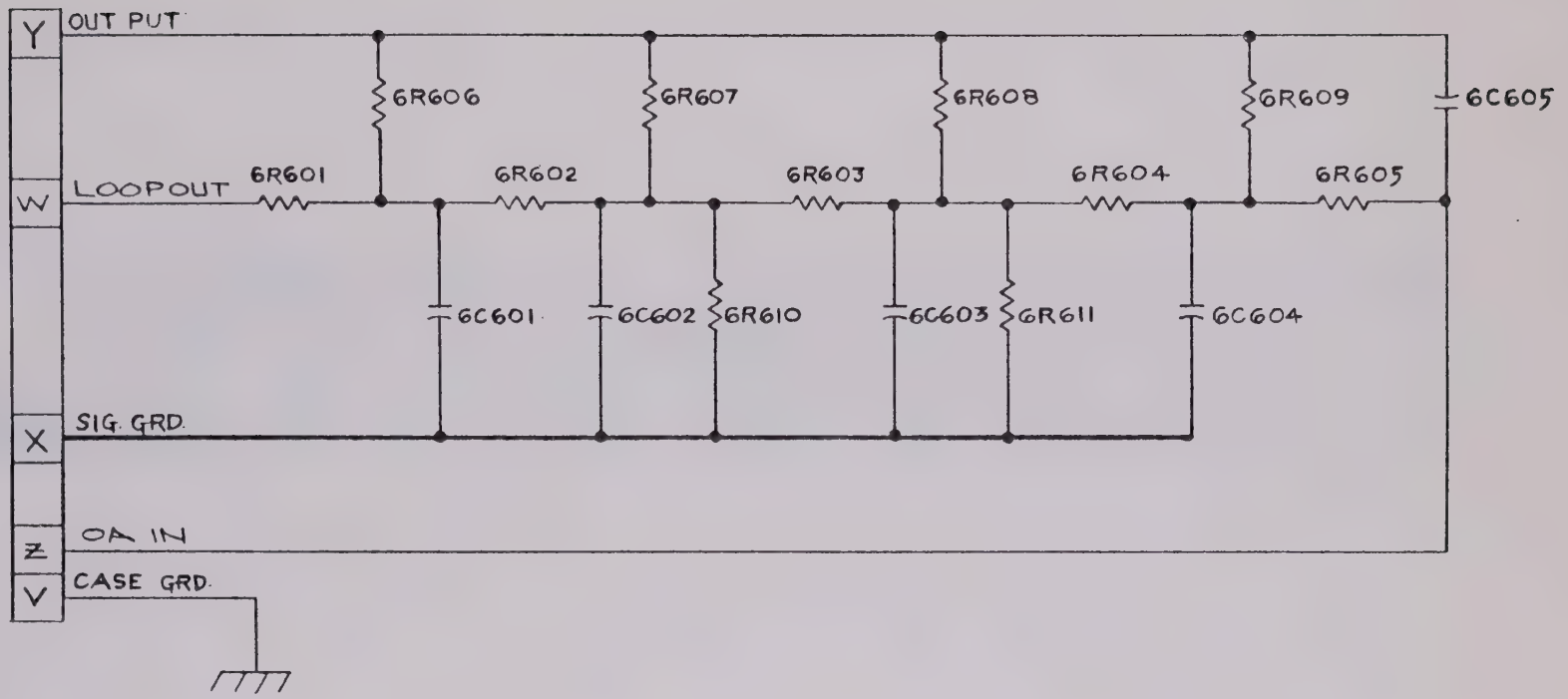


NOTE:
1. EMR Dwg. No. 3891, Rev. O.

Figure 5-53. Schematic Diagram, Model 210C-09 Output Filter Assembly

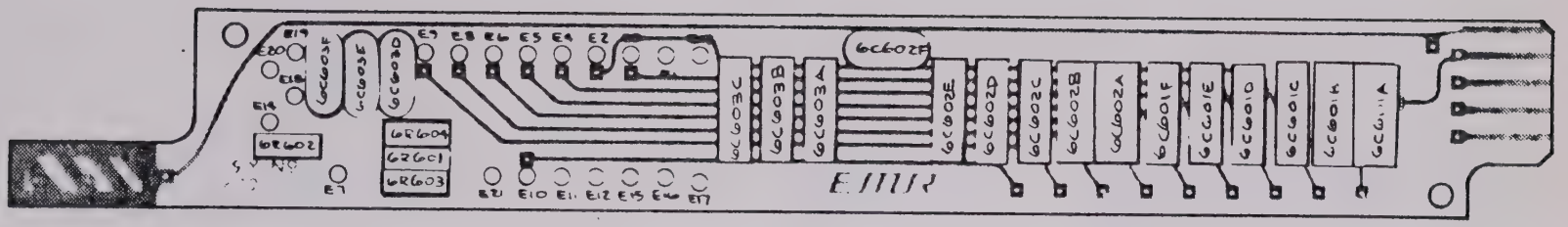

NOTE:
1. EMR Dwg. No. 3842, Rev. O.

Figure 5-54. Component Locations, Model 210C-11
Switchable Low-Pass Output Filter Printed-Wiring-Card Assembly

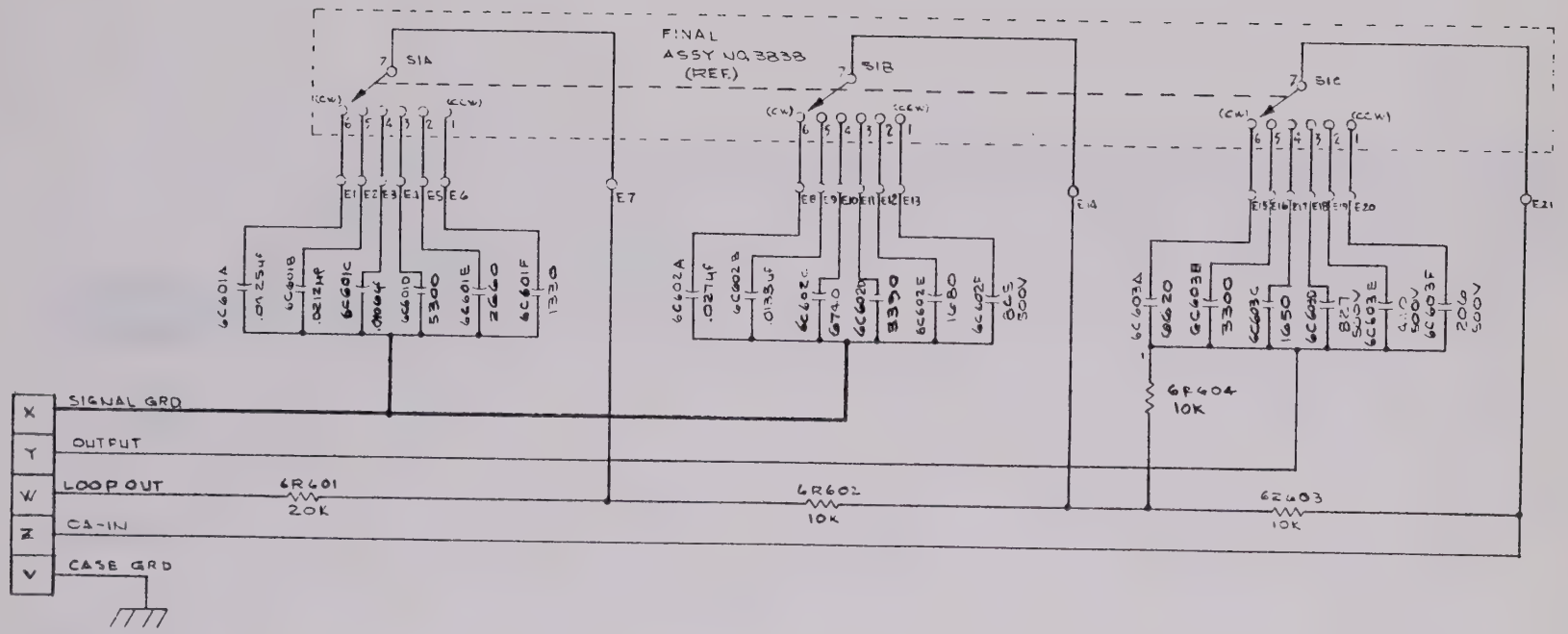


NOTES:
Unless otherwise specified:
1. All resistors are in ohms (K=1000) ±1%, 1/8W.
2. All capacitor values are in picofarads ±1%, 200 volts.
3. EMR Dwg. No. 3844, Rev. O.

Figure 5-55. Schematic Diagram, Model 210C-11 Switchable Low-Pass Output Filter Printed-Wiring-Card Assembly

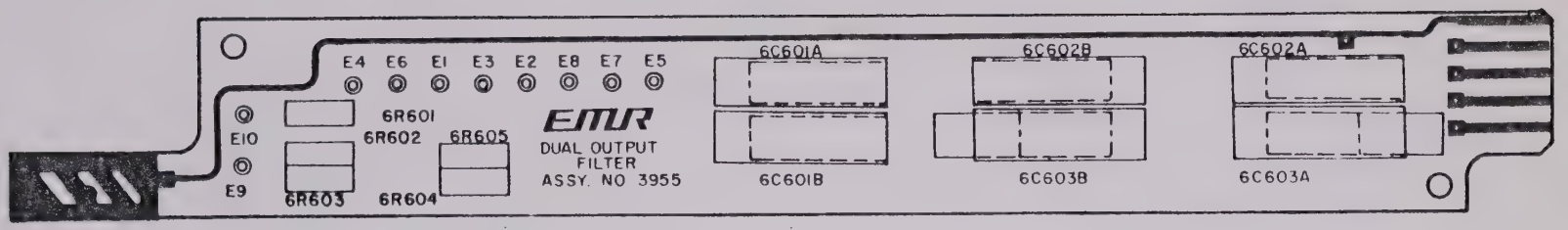


EMR Drawing No. 3955

Figure 5-56. Component Locations, Model 210C-21 Dual Output Filter Printed Wiring Card Assembly

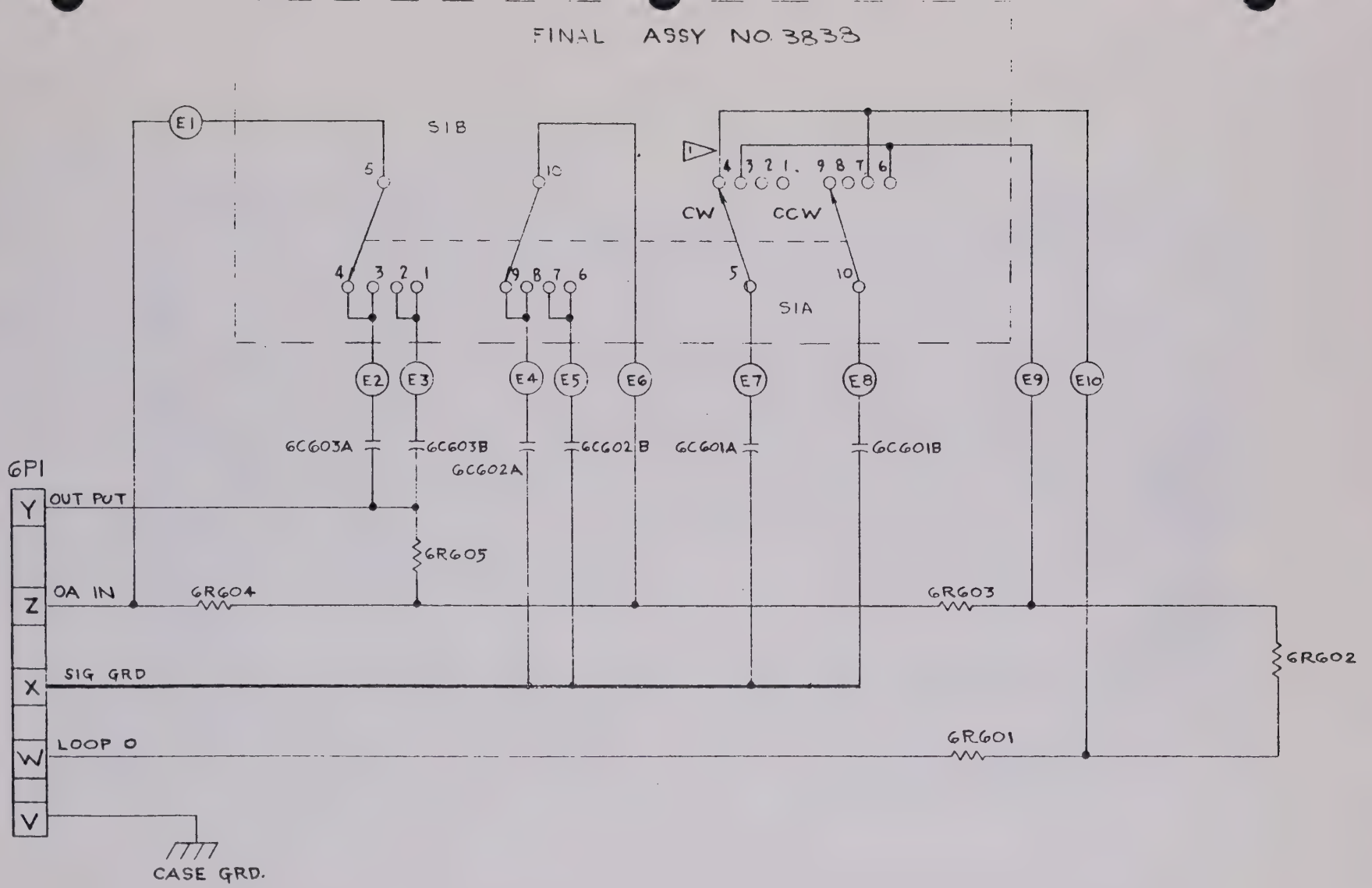


NOTES:

1. Pos. 4 CA .12 Kc
   3 CD .12 Kc
   2 CA .21 Kc
   1 CD .21 Kc
2. For component values see Table 6-24.
3. EMR Dwg. No. 3953, Rev. O.

Figure 5-57. Schematic Diagram, Model 210C-21 Dual Output Filter Printed-Wiring-Card Assembly

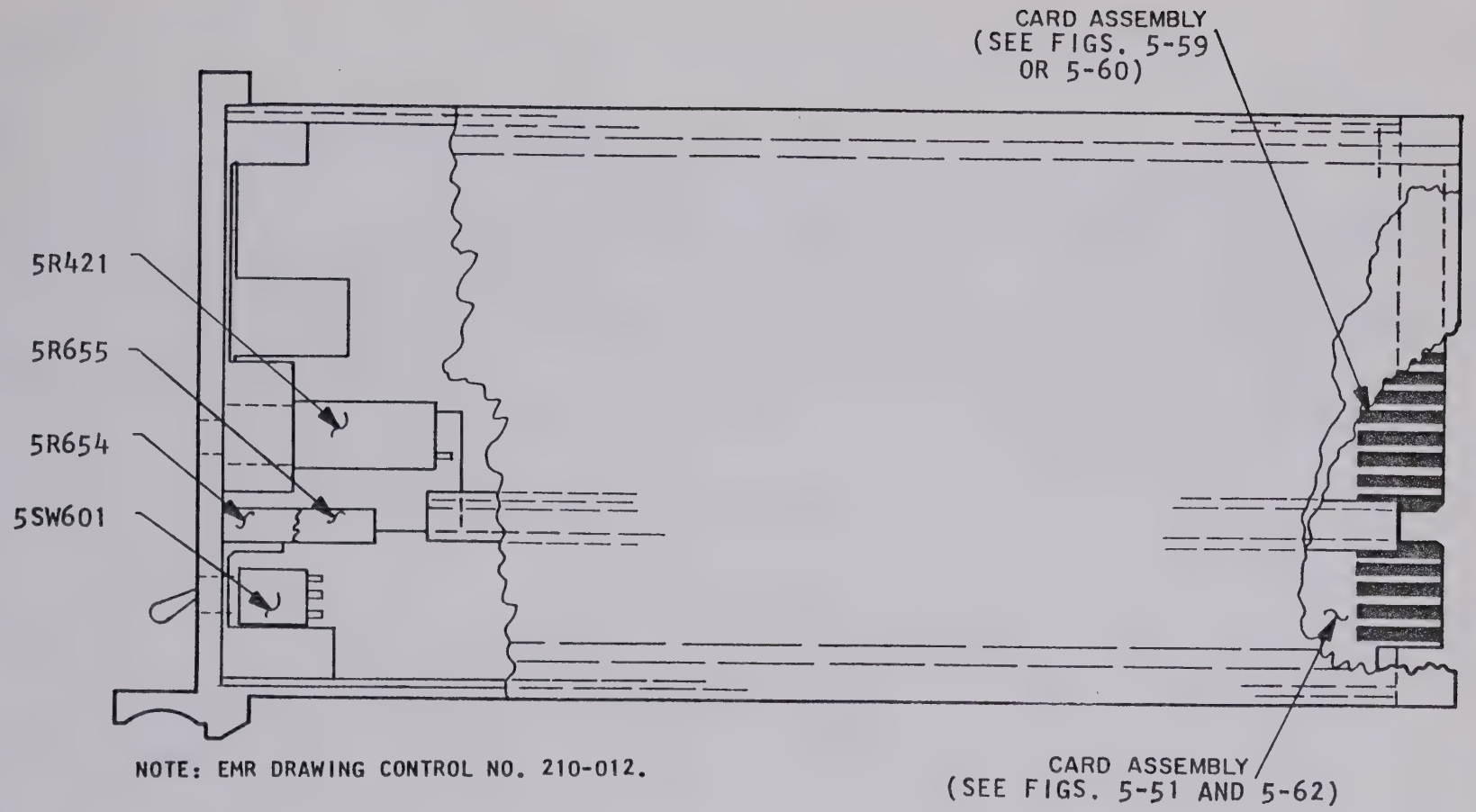


Figure 5-58. Model 210T Reference Channel Selector Assembly

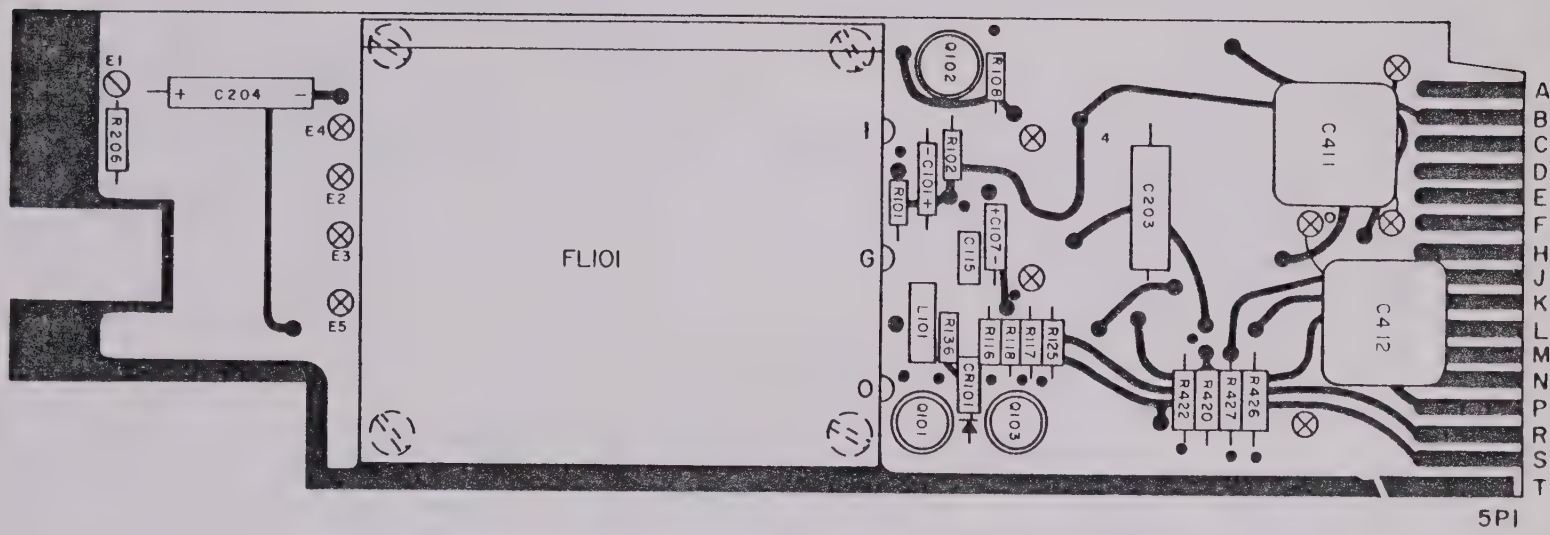


Figure 5-59. Component Locations, Models 210T-01 and 210T-02 Channel Selector Printed-Circuit Card Assemblies

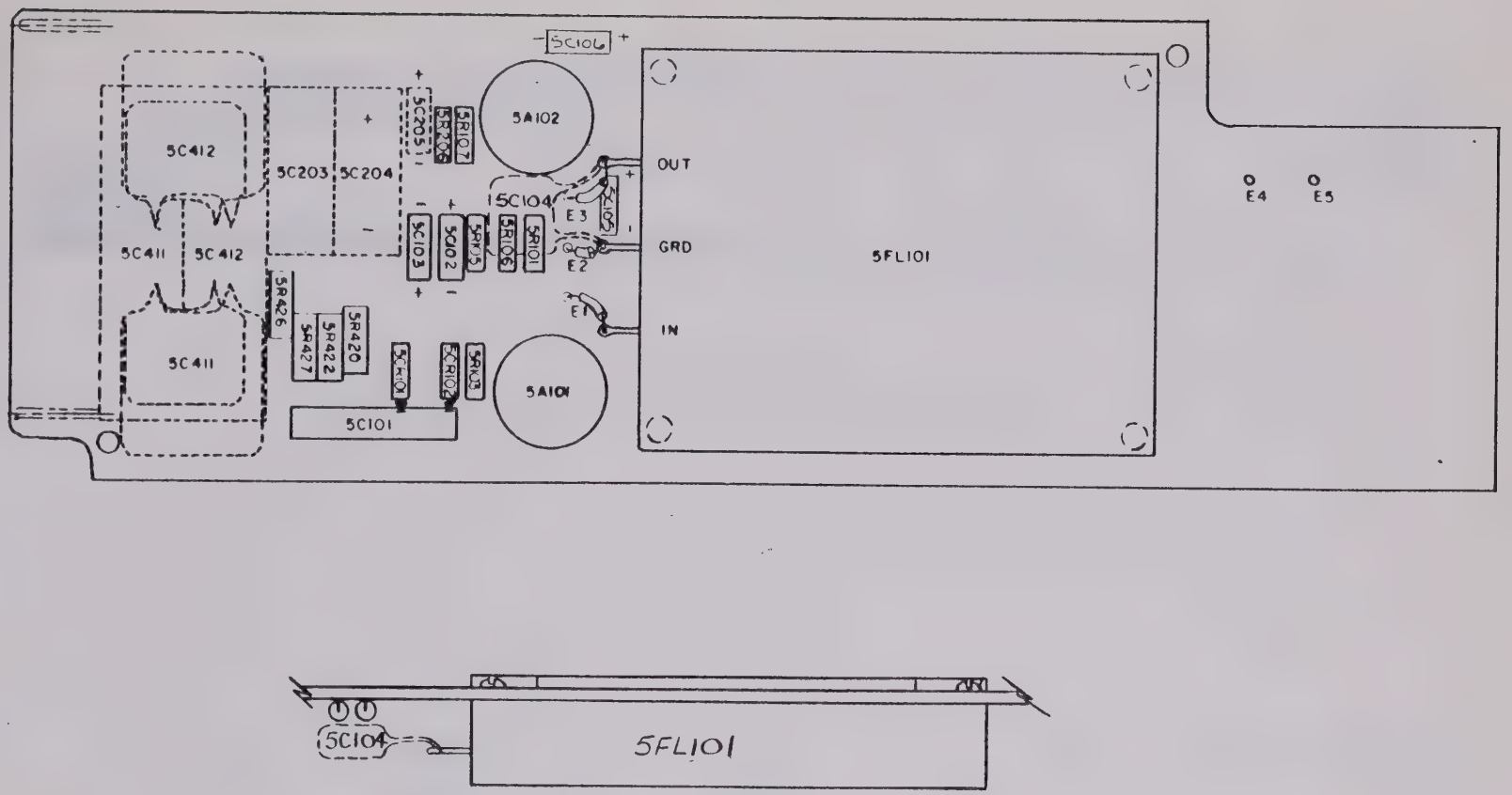





NOTE:

1. EMR Dwg. No. 5990, Rev. A.

Figure 5-60. Component Locations, Models 210T-06, 210T-07, and 210T-08 Channel Selector Printed-Wiring-Card Assemblies

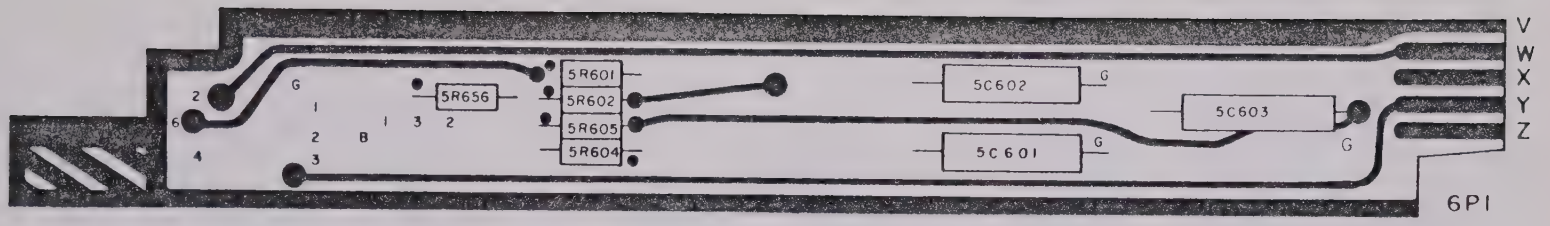


Figure 5-61. Component Locations, Models 210T-01, 210T-03, 210T-06, and 210T-08 Output Filter Printed-Circuit Card Assembly



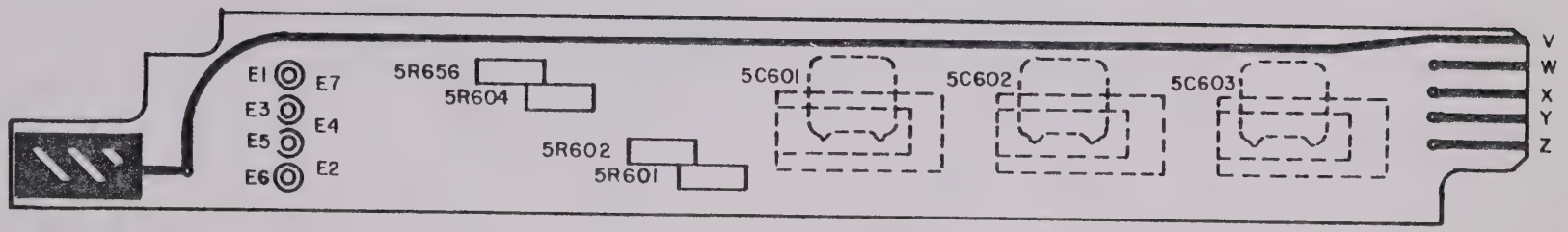


Figure 5-62. Component Locations, Model 210T-02 and 210T-07 Output Filter Printed-Circuit Card Assembly

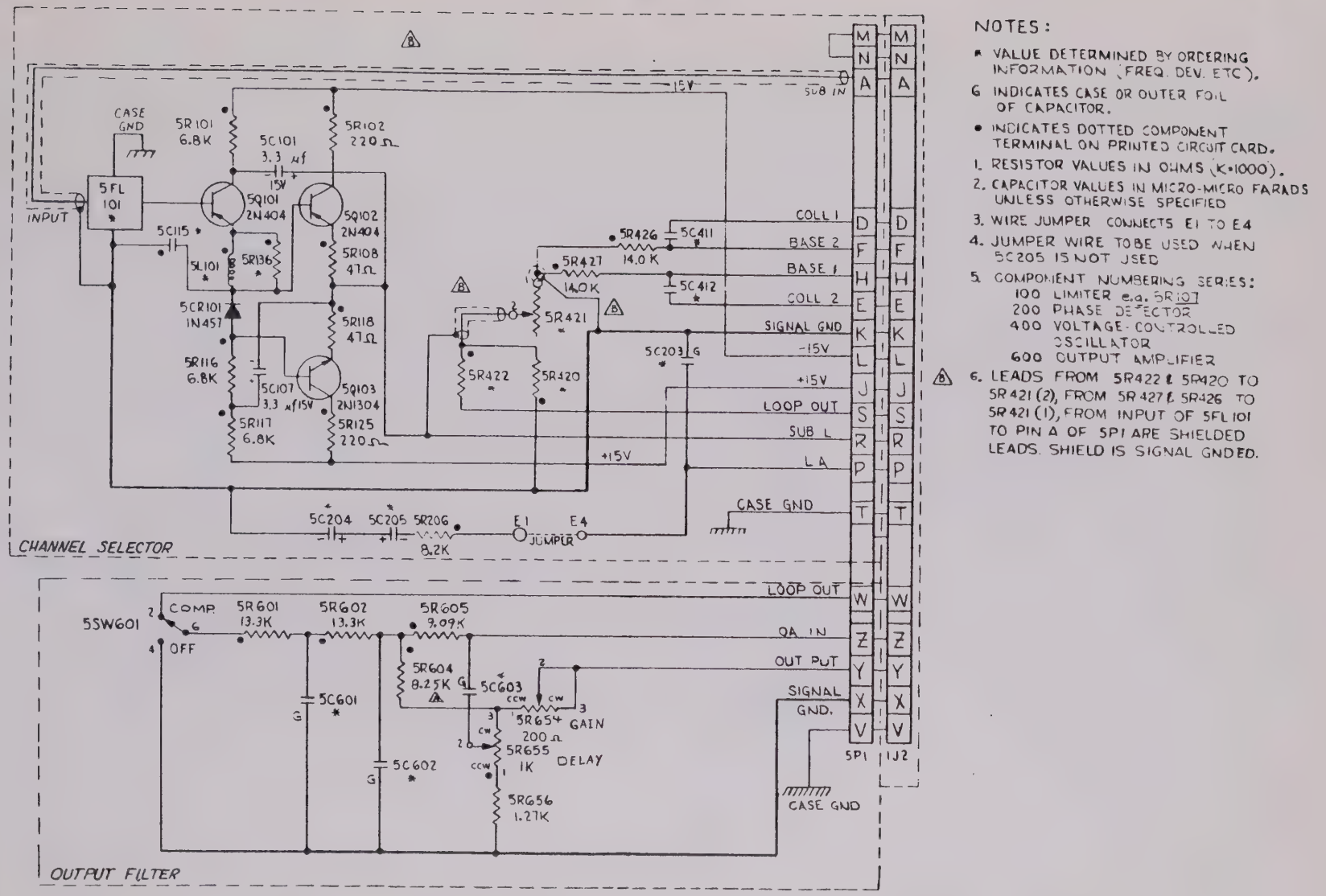


EMR Drawing No. 1440

Figure 5-63. Schematic Diagram, Models 210T-01 and 210T-03 Reference Channel Selector Assembly

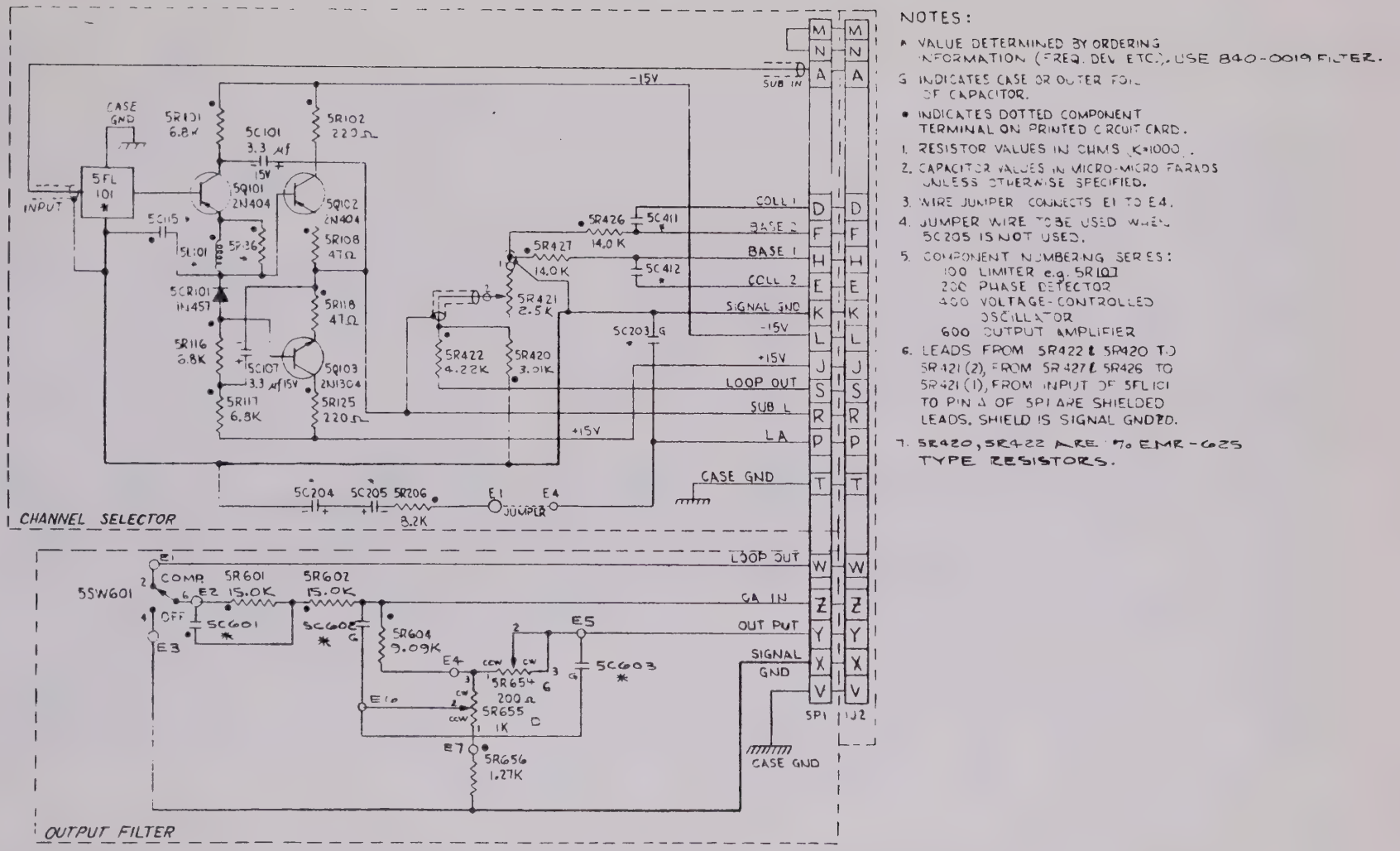


EMR Drawing No. 3109

Figure 5-64. Schematic Diagram, Model 210T-02 Reference Channel Selector Assembly

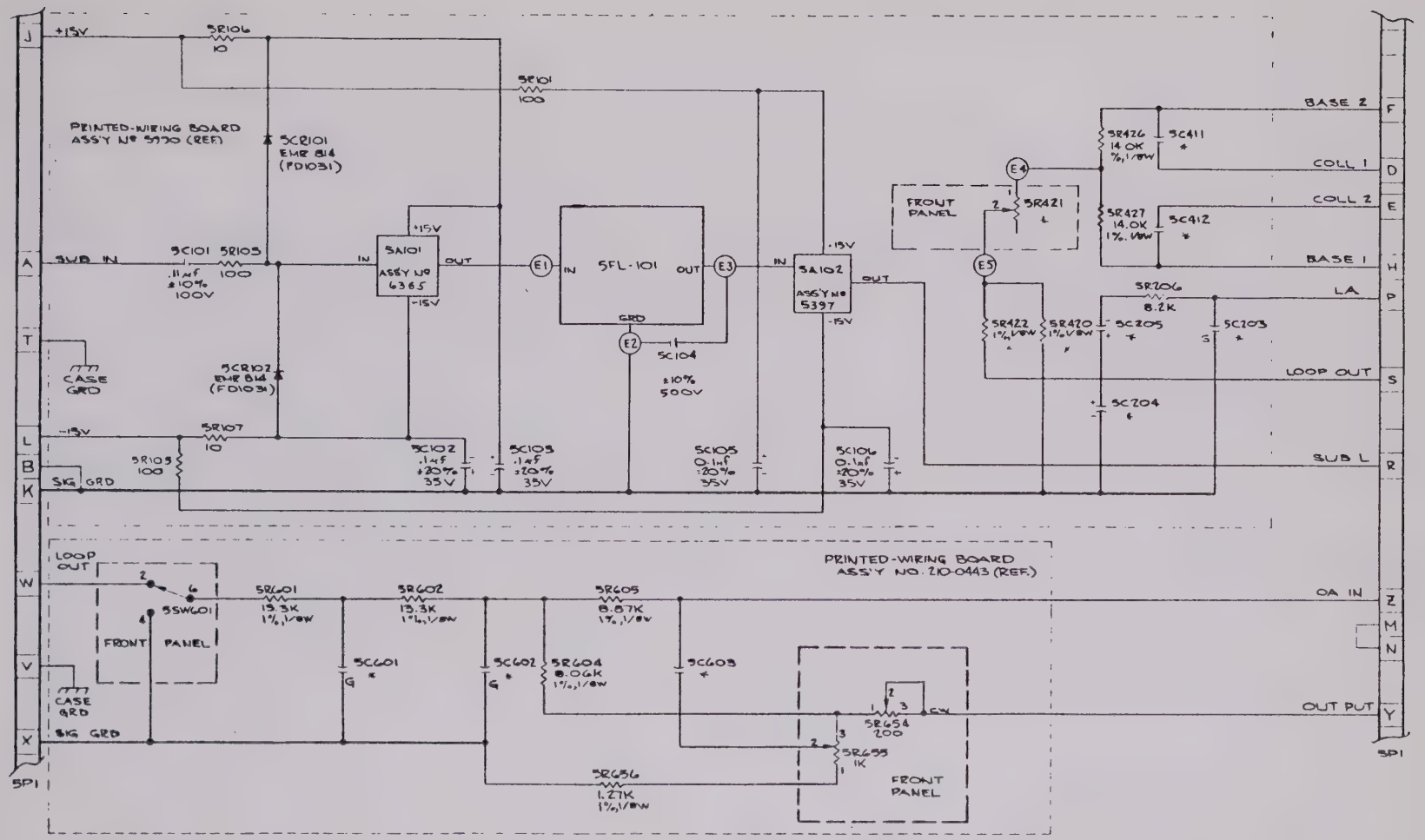


NOTES:
Unless otherwise specified
* Value determined by order information.
G--Indicates case or outer foil of capacitor.
1. All resistor values are in ohms (K=1000) ±5%, 1/4W.
2. All capacitor values are in picofarads.
3. Jumper wire to be used when 5C205 is not used.
4. EMR Dwg. No. 5992, Rev. A.

Figure 5-65. Schematic Diagram, Models 210T-06 and 210T-08 Reference Channel Selector Assemblies

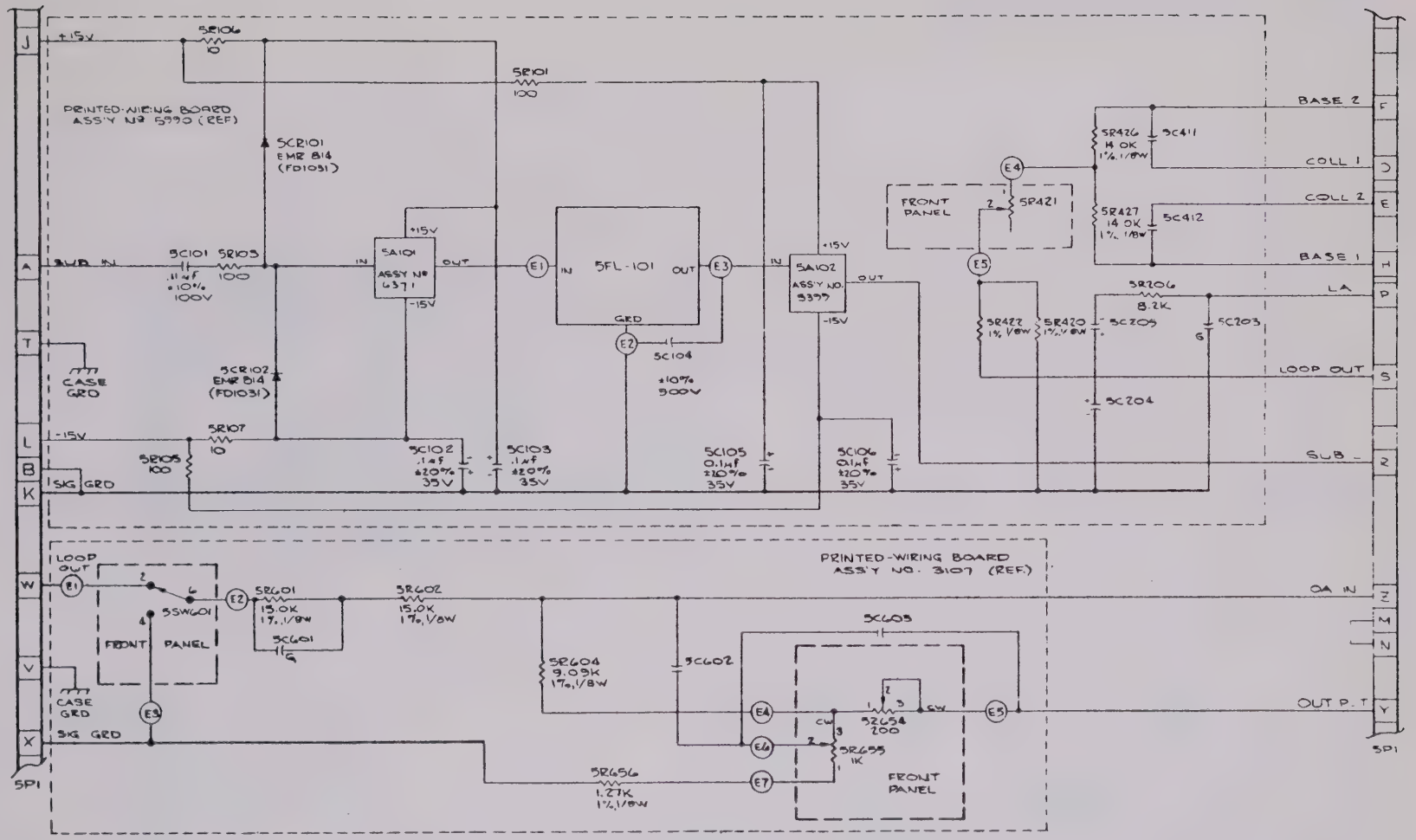


NOTES
Unless otherwise specified
G--Indicates case or outer foil of capacitor.
1. All resistor values are in ohms (R 1000) ±5%, 1/4W.
2. All capacitor values are in picofarads.
3. Jumper wire to be used when 5C205 is not used.
4. EMR Dwg. No. 5495.

Figure 5-66. Schematic Diagram, Model 210T-07 Reference Channel Selector Assembly

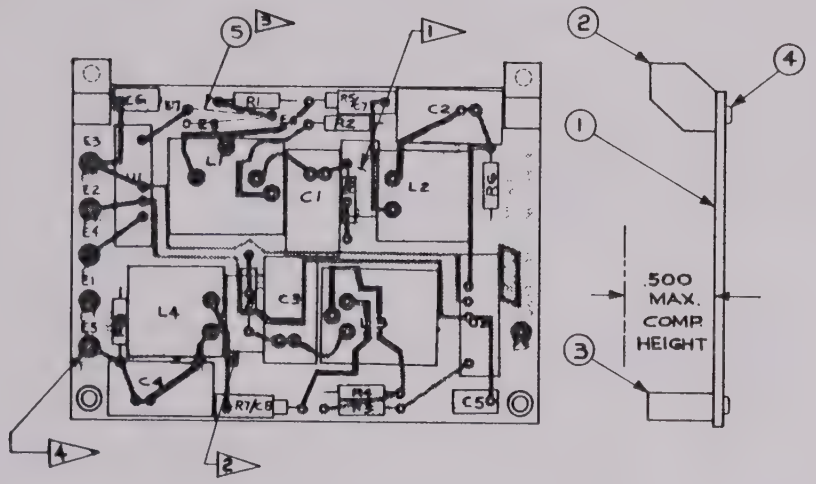


| REVISIONS | | | | |
|---|---|---|---|---|
| SYM | DESCRIPTION | SERIAL EFFECTIVE | DATE | APPROVED |
| A | ECO 40033 COND PATTERN CHNG | 3/4 IX-P | 4-7-70 | |
| B | RIC ADDED -1 CONFIG & USED ON NO. FOR BSC WAS 210B-01-M69 | N/A | 4/29/70 | |
| C | ECO 40188 INTERIM PREVENT SHORT | 3/05 B3 thru A 3xxx09 | 3/25/70 | |
| D | ECO 40991 C7&C8 ADDED, RECOMM LI #3 | 3400/UP | | |

10854 | 1

10854

Notes:

1. TRIMMING CAPACITOR MAY BE PLACED IN PARALLEL WITH C1 TO OBTAIN EXACT VALUE.
2. TRIMMING CAPACITOR MAY BE PLACED IN PARALLEL WITH C3 TO OBTAIN EXACT VALUE.
3. JUMPER E6 TO E7 FOR -1 CONFIG. ONLY. JUMPER E6 TO E8 FOR BSC. CONFIG. ONLY.
4. TOP SOLDER TERMINALS
5. R1 THRU R4, C2 & C4 ARE NOMINAL VALUES ON VAR. CHART, MAY BE CHANGED BY TEST.

| -2 REQUIRED | -1 REQUIRED | BASIC | DWG SIZE | PART NO | DESCRIPTION | PART CLASS | MFG CODE | ITEM OR SYMBOL |
|---|---|---|---|---|---|---|---|---|
| | — | | A | 205-89-00984 | FOR PARTS LIST SEE PL-10854-1 | | | |
| | — | | A | 205-89-00944 | FOR PARTS LIST SEE PL-10854 | | | |

LIST OF MATERIALS

| | | | |
|---|---|---|---|
| -1 | — | 210B-01 | |
| BSC | 20518 | 210B-01 | |
| DASH NO | NEXT ASSY NO | USED ON | |

UNLESS OTHERWISE SPECIFIED
TOLERANCES
DECIMALS ANGLES SURFACE FINISH
ALL DIMENSIONS ARE IN INCHES
REMOVE BURRS AND BREAK EDGES .010 MAX
DIMENSIONS NOT APPLY AFTER FOR WORKMANSHIP ON BOARDS APPLY
DO NOT SCALE DRAWING
MATERIAL
APPLICATION
DO NOT APPLY PART NO PER
LOCATE APPROX AS SHOWN
TREATMENT OR FINISH

| | | DATE |
|---|---|---|
| DRAWN BY | D. Howarth | 3-11-70 |
| DRAFTSMAN | | 3-12-70 |
| CHECKED | | 3-13-70 |
| DESIGN ENGINEER | | |
| PROJECT ENGINEER | K. Osborne | 3/12/70 |
| APPROVED | | |
| APPROVED | | |

EMR SARASOTA DIVISION © 1970
ELECTRO MECHANICAL RESEARCH, INC. • SARASOTA, FLORIDA

PRINTED-WIRING ASSEMBLY
BAND PASS INPUT FILTER
2X2 POLE PAIR STAGGERED (IDC)

| CODE IDENT NO | SIZE | | REV |
|---|---|---|---|
| 06141 | C | 10854 | D |
| SCALE 2/1 | 205-89-00944 | SHEET 1 | OF 1 |

EMR 3 2 174 OZALID

Figure 5-67. Assembly Diagram, Models 210B-01 and 210B-02 BPIF 5FL101 (Part Nos. 10854 or 10854-1)

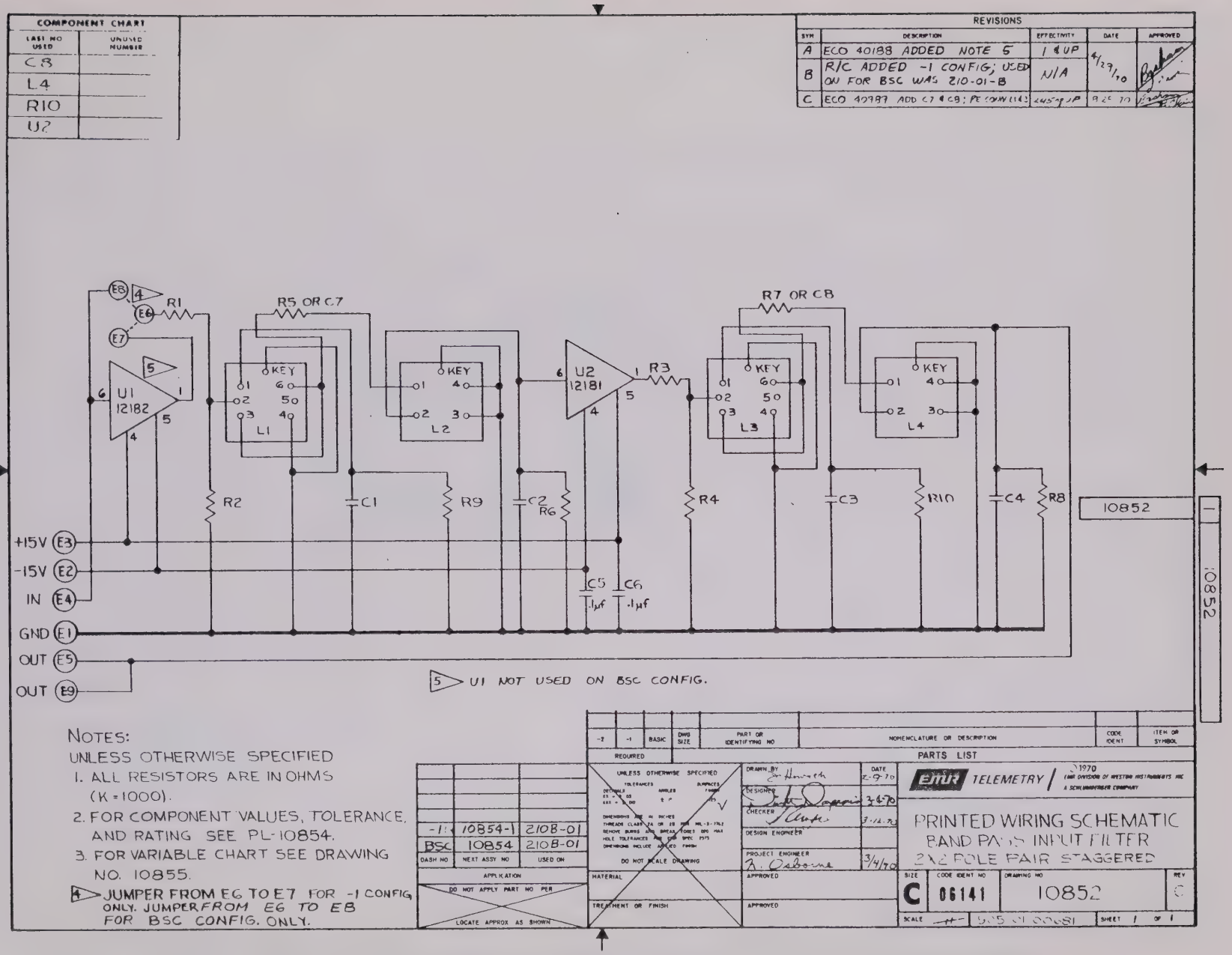


Figure 5-68. Schematic Diagram, Models 210B-01 and 210B-02 BPIF 5FL101 (Part Nos. 10854 or 10854-1)

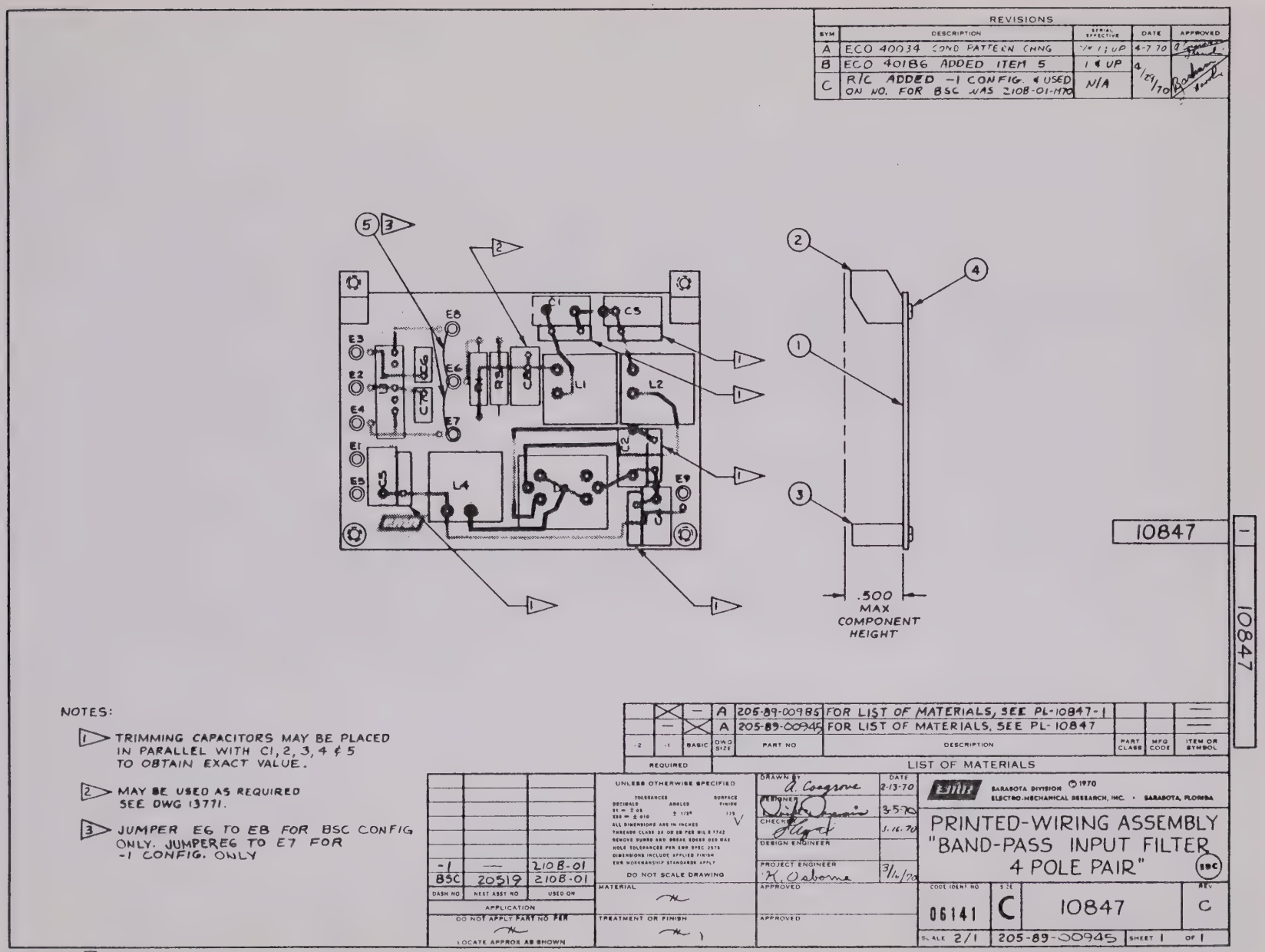


Figure 5-69. Assembly Diagram, Models 210B-01 and 210B-02 BPIF 5FL101 (Part Nos. 10847 or 10847-1)

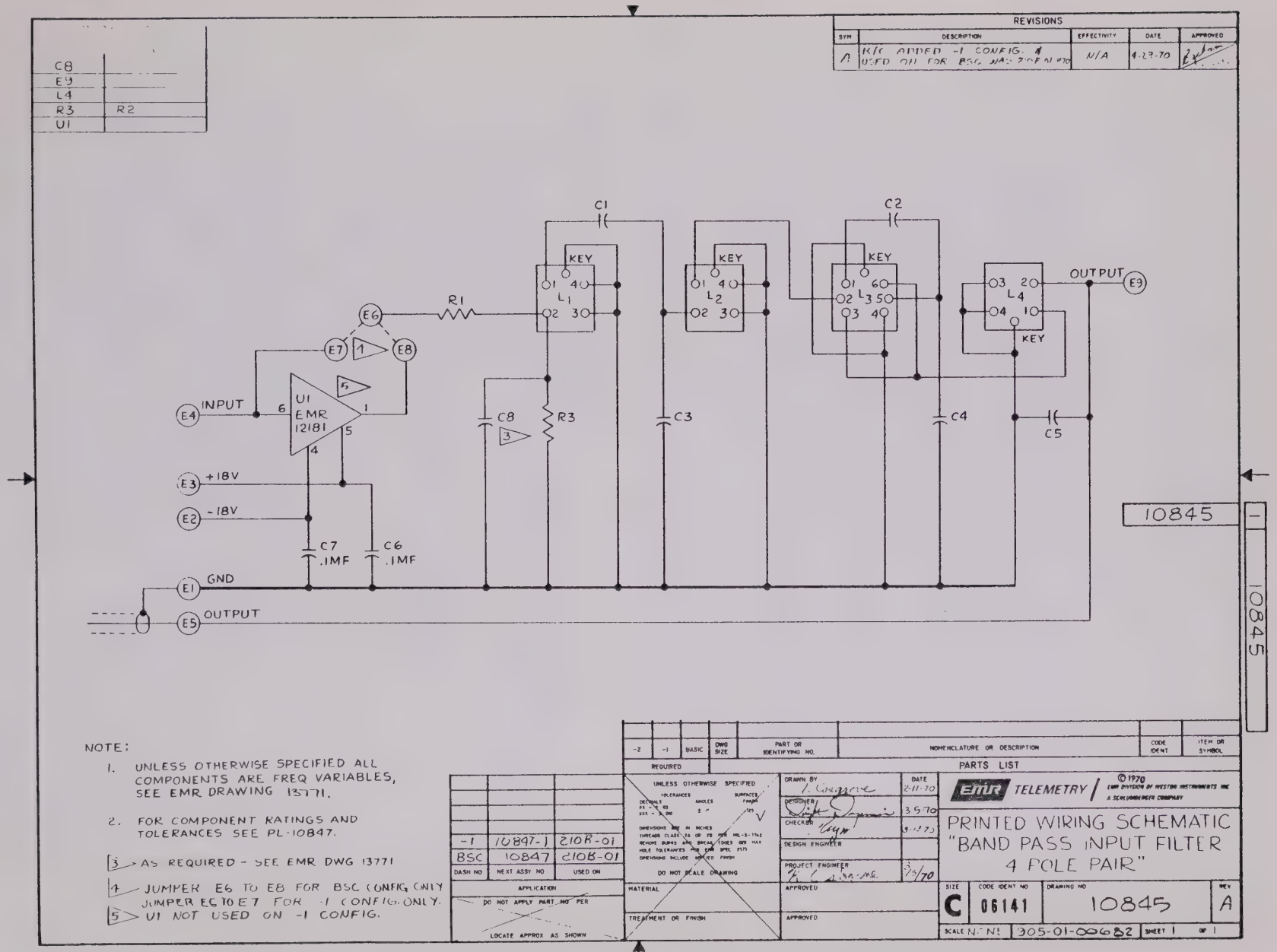


Figure 5-70. Schematic Diagram, Models 210B-01 and 210B-02 BPIF 5FL101 (Part Nos. 10847 or 10847-1)

# SECTION 6

# REPLACEABLE PARTS LIST

## 6.1 GENERAL

This section contains information necessary to identify electronic components for the EMR Model 210 Subcarrier Discriminators. Parts information is presented in tabular form and is keyed to illustrations in Section 5 of this manual. The parts list tables are broken down into the following columns: Circuit Symbol No. column identifies the particular part by its reference designations; the Description column gives a complete description of the item; the Manufacturer column gives the name and manufacturer's part number. Where an asterisk appears in the Manufacturer's Name column, refer to the number in Table 6-45 which corresponds to the EMR specification number appearing in the Part No. column for the applicable part. Where no name or symbol appears in the Name column, any manufacturer furnishing components within specification of the EIA (Electronic Industries Association) part number or the MIL-Standard part number identified in the Part No. column is acceptable.

Reference designations of the components are coded to illustrate circuit usage. The code is as follows:

Component Location Designation

1: Main Printed-Circuit Card Assembly - - example 1R209
2: Secondary Printed-Circuit Card Assembly - - example 2C703
3: VCO Oven Assembly
4: Front Panel Assembly
5: Channel Selector Plug-In (Models 210B or 210T)
6: Output Filter Plug-In (Model 210C)
7: Inverting Amplifier

Component Circuit Designation

100: Limiter - example 5R101
200: Phase Detector and Loop Amplifier
300: Loss-of-Signal and Loss-of-Lock
400: Voltage-Controlled Oscillator
500: VCO Oven Controller
600: Output Amplifier
700: Chopper Amplifier
800: Power Supply Regulators
900: Inverting Amplifier

Components in the parts list which are variable with frequency are referenced to specific tables at the end of the parts list. These tables contain component types and formulas for calculating the values of the variable components. The formulas may be used for all frequencies including non-standard center frequencies.

Table 6-1. Model 210 Subcarrier Discriminator Assembly (Ref. Figure 5-7)

| CIRCUIT SYMBOL NO. | DESCRIPTION | MANUFACTURER | |
|---|---|---|---|
| | | NAME | PART NO. |
| | MODEL 210A DISCRIMINATOR ASSEMBLY | EMR | 210-0010 |
| | FRONT PANEL ASSEMBLY (See Table 6-2 for breakdown) | EMR | 210-0014 |
| | MAIN CARD ASSEMBLY (See Table 6-3 for breakdown) | EMR | 210-0011 |
| | OVEN ASSEMBLY (See Table 6-4 for breakdown) | EMR | 210-0015 |
| | INVERTING AMPLIFIER ASSEMBLY (See Table 6-5 for breakdown) | EMR | 210-0017 |
| | SECONDARY CARD ASSEMBLY (See Table 6-6 for breakdown) | EMR | 210-0012 |
| | MODEL 210B CHANNEL SELECTOR ASSEMBLY (See Table 6-7 for breakdown) | EMR | |
| | MODEL 210C OUTPUT FILTER ASSEMBLY (See Table 6-10 for breakdown) | EMR | |
| | MODEL 210T REFERENCE CHANNEL SELECTOR ASSEMBLY (See Table 6-15 for breakdown) | EMR | |

Table 6-2. Model 210A Front Panel Assembly (Ref. Figure 5-9)

| CIRCUIT SYMBOL NO. | DESCRIPTION | MANUFACTURER | |
|---|---|---|---|
| | | NAME | PART NO. |
| | FRONT PANEL ASSEMBLY | EMR | 210-0014 |
| 4DS301 and 4DS302 | INDICATOR | Eldema | CGW-22100-02 |
| 4J101 and 4J601 | TEST JACK, White | Sealectro | SKT-8 |
| 4M201 | DC MICROAMMETER | * | 802 |
| 4R636 | POTENTIOMETER, Mult-turn | EMR | 945-0017 or 945-0022 |
| 7SW901 | SWITCH, Toggle (Used on Model 210A-04 and 210A-05 only) | Torbal | SP-10 |
| | KNOB (Used on Models 210A-01 and 210A-04) | EMR | 210-1027 |
| | KNOB, Duodial (Used on Models 210A-02 and 210A-05) | Beckman | 26006-106-0 |

Table 6-3. Model 210A Main Card Assembly (Ref. Figure 5-10)

| CIRCUIT SYMBOL NO. | DESCRIPTION | MANUFACTURER | |
|---|---|---|---|
| | | NAME | PART NO. |
| | MAIN CARD ASSEMBLY | EMR | 210-0011 |
| 1CR102, 1CR103, 1CR104, 1CR105 1CR106 and 1CR107 | DIODE | * | 951 |
| 1CR108, 1CR109, 1CR201, 1CR301, 1CR302, 1CR303, 1CR304, 1CR305, 1CR306, 1CR307, 1CR401, 1CR402, 1CR404 and 1CR405 | DIODE | Transitron or equiv. | 1N276 |
| 1CR202 | DIODE | Transitron or equiv. | 1N457 |
| 1CR403 | DIODE, Zener, 7.5V ±5%, 400 MW | Motorola or equiv. | 1N755A |
| 1CR503 | DIODE | Transitron or equiv. | 1N645 |
| 1C102 and 1C301 | CAPACITOR, 3.3µf ±20%, 15V, Type 150D | Sprague or equiv. | 335X0015A2 |
| 1C103, 1C104, 1C108, 1C109, 1C110, 1C111, 1C112, 1C113, 1C303 and 1C304 | CAPACITOR, 22µf ±20%, 15V, Type 150D | Sprague or equiv. | 226X0015B2 |
| 1C105, 1C106, 1C114 and 1C302 | CAPACITOR, 6.8µf ±20%, 35V, Type 150D | Sprague or equiv. | 685X0035B2 |
| 1C115, 1C117, 1C201, 1C405, and 1C406 | CAPACITOR, 39Pf ±10%, 500V | Arco or equiv. | DM15-390K |
| 1C116 and 1C118 | CAPACITOR, 120Pf ±10%, 500V | Arco or equiv. | DM15-121K |
| 1C202, 1C402, and 1C403 | CAPACITOR, 27Pf ±10%, 500V | Arco or equiv. | DM15-270K |
| 1C206 and 1C207 | CAPACITOR, 560 Pf ±10%, 300V | Arco or equiv. | DM15-561K |
| 1C210 | CAPACITOR, 47Pf ±10%, 500V | Arco or equiv. | DM15-470K |

Table 6-3 (Cont'd.). Model 210A Main Card Assembly (Ref. Figure 5-10)

| CIRCUIT SYMBOL NO. | DESCRIPTION | MANUFACTURER | |
|---|---|---|---|
| | | NAME | PART NO. |
| 1C305 and 1C306 | CAPACITOR, 1000Pf ±10%, 100V | Arco or equiv. | DM15-102K |
| 1C307 | CAPACITOR, 0.01μf ±20%, 200V | Dearborn or equiv. | XIP103M2 |
| 1C401 and 1C404 | CAPACITOR, 100 Pf ±10%, 500V | Arco or equiv. | DM15-101K |
| 1J3 | CONNECTOR, 10 Pin | Brown Eng. or equiv. | BEACON-2805-01 |
| 1Q104, 1Q105, 1Q107, 1Q109, 1Q110, 1Q203, 1Q204, 1Q205, 1Q206, 1Q207, 1Q208, 1Q209, 1Q210, 1Q302, 1Q303, 1Q304, 1Q305 and 1Q308 | TRANSISTOR | RCA or equiv. | 2N404 |
| 1Q106, 1Q108 and 1Q301 | TRANSISTOR | RCA or equiv. | 2N1224 |
| 1Q111, 1Q202 and 1Q211 | TRANSISTOR | Texas Inst. or equiv. | 2N1304 |
| 1Q201 | TRANSISTOR | Sprague | 2N1499A |
| 1Q306 and 1Q309 | TRANSISTOR | RCA or equiv. | 2N398A |
| 1Q307 | TRANSISTOR | Sprague or equiv. | 2N2048 |
| 1Q401 and 1Q402 | TRANSISTOR | Fairchild or equiv. | 2N708 |
| 1P1 | CONNECTOR, 22 Pin | Amphenol or equiv. | 133-022-23 |
| 1P1R1 and 1P1R3 | RESISTOR, 680 ohm ±5%, 1/4W (Used on Model 210A-01-M20 only) | Allen Bradley | CB6815 |
| 1P1R2 and 1P1R4 | RESISTOR, 330 ohm ±5%, 1/4W (Used on Model 210A-01-M20 only) | Allen Bradley | CB3315 |
| 1R102, 1R103, 1R406, 1R107, 1R134, 1R135 and 1R307 | RESISTOR, 3.3K ±5%, 1/4W | Allen Bradley or equiv. | CB3325 |
| 1R104, 1R112, and 1R317 | RESISTOR, 22K ±5%, 1/4W | Allen Bradley or equiv. | CB2235 |
| 1R105, 1R109, 1R120, 1R130, 1R133, 1R136, 1R302 and 1R320 | RESISTOR, 4.7K ±5%, 1/4W | Allen Bradley or equiv. | CB4725 |
| 1R106, 1R127, 1R137, 1R208, 1R222 and 1R327 | RESISTOR, 15K ±5%, 1/4W | Allen Bradley or equiv. | CB1535 |
| 1R110, 1R121, 1R132, 1R139, 1R142, 1R207 and 1R223 | RESISTOR, 470 ohm ±5%, 1/4W | Allen Bradley | CB4715 |

Table 6-3 (Cont'd.). Model 210A Main Card Assembly (Ref. Figure 5-10)

| CIRCUIT SYMBOL NO. | DESCRIPTION | MANUFACTURER | |
|---|---|---|---|
| | | NAME | PART NO. |
| 1R111, 1R122, 1R129, 1R131, 1R212, 1R215, 1R316, 1R326, 1R403, 1R405, 1R413 and 1R416 | RESISTOR, 10K ±5%, 1/4W | Allen Bradley or equiv. | CB1035 |
| 1R113 and 1R124 | RESISTOR, 562 ohm ±1%, 1/4W | IRC or equiv. | MEA-TO |
| 1R114 and 1R115 | RESISTOR, 1K ±5%, 1/4W | Allen Bradley or equiv. | CB1025 |
| 1R119, 1R126, 1R315 and 1R329 | RESISTOR, 100K ±5%, 1/4W | Allen Bradley or equiv. | CB1045 |
| 1R123, 1R301, 1R310, 1R311 and 1R404 | RESISTOR, 2.2K ±5%, 1/4W | Allen Bradley or equiv. | C2225 |
| 1R128, 1R303, 1R408, 1R409 | RESISTOR, 6.8K ±5%, 1/4W | Allen Bradley or equiv. | CB6825 |
| 1R216 and 1R219 | RESISTOR, 8.2K ±5%, 1/4W | Allen Bradley or equiv. | CB8225 |
| 1R138 and 1R141 | RESISTOR, 2.7K ±5%, 1/4W | Allen Bradley or equiv. | CB2725 |
| 1R140, 1R143 and 1R323 | RESISTOR, 820 ohm ±5%, 1/4W | Allen Bradley or equiv. | CB8215 |
| 1R201, 1R414 and 1R415 | RESISTOR, 47K ±5%, 1/4W | Allen Bradley or equiv. | CB4735 |
| 1R202 | RESISTOR, 4.7K ±5%, 1/4W (Used on Models 210A-01, 210A-02, 210A-04, 210A-05, 210A-01-M8, 210A-01-M1, 210A-02-M1 and 210A-01-M20) | Allen Bradley or equiv. | CB4725 |
| 1R202 | RESISTOR, 2K ±5%, 1/4W (Used on 210A-01-M3 and 210A-02-M3, 210A-01-M6 and 210A-02-M6) | Allen Bradley or equiv. | CB2025 |
| 1R203, 1R218 and 1R221 | RESISTOR, 6.81K ±1%, 1/4W | IRC or equiv. | MEA-TO |
| 1R204 | RESISTOR, Variable, 0-500 ohm ±20%, 1/4W | Allen Bradley or equiv. | RP |
| 1R205 | RESISTOR, 5.49K ±1%, 1/4W | IRC or equiv. | MEA-TO |
| 1R209, 1R224 and 1R225 | RESISTOR, 10.0K ±1%, 1/4W | IRC or equiv. | MEA-TO |
| 1R210, 1R305 1R324, 1R325 and 1R330 | RESISTOR, 150K ±5%, 1/4W | Allen Bradley or equiv. | CB1545 |
| 1R211 and 1R213 | RESISTOR, 47 ohm ±5%, 1/4W | Allen Bradley or equiv. | CB4705 |
| 1R214 | RESISTOR, 29.4K ±1%, 1/4W | IRC or equiv. | MEA-TO |
| 1R217, 1R220, 1R313 and 1R322 | RESISTOR, 2.87K ±1%, 1/4W | IRC or equiv. | MEA-TO |

Table 6-3 (Cont'd.). Model 210A Main Card Assembly (Ref. Figure 5-10)

| CIRCUIT SYMBOL NO. | DESCRIPTION | MANUFACTURER | |
|---|---|---|---|
| | | NAME | PART NO. |
| 1R226 | RESISTOR, 620 ohm ±5%, 1/4W (Used on Models 210A-01-M6 and 210A-02-M6) | Allen Bradley or equiv. | CB6215 |
| 1R227 | RESISTOR, 5.1K ±5%, 1/4W (Used on Models 210A-01-M3 and 210A-02-M3) | Allen Bradley or equiv. | CB5125 |
| 1R304 | RESISTOR, 56K ±5%, 1/4W | Allen Bradley | CB5635 |
| 1R306 and 1R312 | RESISTOR, 39K ±5%, 1/4W | Allen Bradley or equiv. | CB3935 |
| 1R308 | RESISTOR, 5.6K ±5%, 1/4W | Allen Bradley or equiv. | CB5625 |
| 1R309 and 1R318 | RESISTOR, 82K ±5%, 1/4W | Allen Bradley or equiv. | CB8235 |
| 1R314 and 1R429 | RESISTOR, 1.10K ±1%, 1/4W | IRC or equiv. | MEA-T2 |
| 1R319 | RESISTOR, Variable, 0-50K, 1/4W | Allen Bradley or equiv. | RP |
| 1R321 | RESISTOR, 1.62K ±1%, 1/4W | IRC or equiv. | MEA-TO |
| 1R328 | RESISTOR, 47K ±5%, 1/4W | Allen Bradley or equiv. | CB4735 |
| 1R401 and 1R407 | RESISTOR, 8.2K ±5%, 1/4W | Allen Bradley or equiv. | CB8225 |
| 1R419 and 1R423 | RESISTOR, 4.64K ±1%, 1/4W | IRC or equiv. | MEA-TO |
| 1R428 | RESISTOR, 2.26K ±1%, 1/4W | IRC or equiv. | MEA-T2 |
| 1R430 | RESISTOR, 8.45K ±1%, 1/4W | IRC or equiv. | |
| 1R431 | RESISTOR, ±5%, 1/4W (Factory adjustment, range 39K to 1 MEG.) | Allen Bradley | CB |
| 1R432 | RESISTOR, 9.09K ±1%, 1/4W | IRC or equiv. | MEA-T2 |
| 1R433 | RESISTOR, 27K ±5%, 1/4W | Allen Bradley or equiv. | CB2735 |
| | MAIN PRINTED-CIRCUIT CARD (Used on Models 210A-01, 210A-01-M1, 210A-01-M8, 210A-01-M20, 210A-02, 210A-02-M1, 210A-04 and 210A-05) | EMR | 210-1002-1 |
| | MAIN PRINTED-CIRCUIT CARD (Used on Models 210A-01-M6 and 210A-02-M6) | EMR | 210-1002-2 |
| | MAIN PRINTED-CIRCUIT CARD (Used on Models 210A-01-M3 and 210A-02-M3) | EMR | 210-1002-3 |

Table 6-4. Model 210A Oven Assembly (Ref. Figure 5-12)

| CIRCUIT SYMBOL NO. | DESCRIPTION | MANUFACTURER | |
|---|---|---|---|
| | | NAME | PART NO. |
| | OVEN ASSEMBLY | EMR | 210-0015 |
| 3J4 | CONNECTOR (Modified) | EMR | 210-1022 |
| 3Q504 | TRANSISTOR | RCA or equiv. | 2N1183A |
| | OVEN CARD ASSEMBLY | EMR | 210-0013 |
| 3CR406, 3CR407 and 3CR408 | DIODE | * | 951 |
| 3CR501 and 3CR502 | DIODE | Transitron | 1N645 |
| 3Q405, 3Q406 and 3Q407 | TRANSISTOR | Fairchild | 2N708 |
| 3Q501, 3Q502 and 3Q503 | TRANSISTOR | RCA | 2N404 |
| 3RT501 | RESISTOR, Thermal, 5K ±20% | Victory Eng. Co. | 35A18 |
| 3R434 and 3R436 | RESISTOR, 1K ±1%, 1/10W | IRC | EM |
| 3R435 | RESISTOR, 15 ohm ±5%, 1/4W | Allen Bradley | CB1505 |
| 3R437 | RESISTOR, 10K ±1%, 1/10W | IRC | EM |
| 3R501 | RESISTOR, 5.6K ±5%, 1/4W | Allen Bradley | CB5625 |
| 3R502 | RESISTOR, 15K ±5%, 1/4W | Allen Bradley | CB1535 |
| 3R503 | RESISTOR, 2.2K ±5%, 1/4W | Allen Bradley | CB2225 |
| 3R504 | RESISTOR, 10K ±5%, 1/4W | Allen Bradley | CB1035 |
| 3R505 | RESISTOR, (Factory adjustment, range 5.6K to 560K) ±5%, 1/4W | Allen Bradley | CB |
| 3R506 | RESISTOR, (Factory adjustment, range 0.909K to 1.62K) ±1%, 1/10W | IRC | EM |
| 3R507 | RESISTOR, 825 ohm ±1%, 1/10W | IRC | EM |
| 3R509 | RESISTOR, 464 ohm ±1%, 1/10W | IRC | EM |
| 3R510 | RESISTOR, 220 ohm ±5%, 1/4W | Allen Bradley | CB2215 |
| 3R511 | RESISTOR, 2.7K ±5%, 1/4W | Allen Bradley | CB2725 |
| | PRINTED-CIRCUIT CARD | EMR | 210-1004 |

Table 6-5. Model 210A Inverting Amplifier Card Assembly (Ref. Figure 5-15)

| CIRCUIT SYMBOL NO. | DESCRIPTION | MANUFACTURER | |
|---|---|---|---|
| | | NAME | PART NO. |
| | INVERTING AMPLIFIER CARD ASSEMBLY | EMR | 210-0017 |
| 7CR901 | DIODE | Transitron | S320G |
| 7C902 | CAPACITOR, 100Pf ±10%, 500V | Arco | DM15-101K |
| 7C903 | CAPACITOR, 180Pf ±10%, 500V | Arco | DM15-181K |
| 7Q901 and 7Q902 | TRANSISTOR | Motorola | 2N708 |
| 7Q903 and 7Q904 | TRANSISTOR | Motorola | MM998 |
| 7Q905 | TRANSISTOR | Texas Inst. | 2N1308 |
| 7Q906 | TRANSISTOR | Texas Inst. | 2N1309 |
| 7R901 and 7R902 | RESISTOR, 33.2K ±1%, 1/8W | IRC or equiv. | MEA-T2 |
| 7R903 | RESISTOR, 6.8K ±5%, 1/4W | Allen Bradley or equiv. | CB6825 |
| 7R904 and 7R916 | RESISTOR, 470 ohm ±5%, 1/4W | Allen Bradley or equiv. | CB4715 |
| 7R905 and 7R910 | RESISTOR, 47 ohm ±5%, 1/4W | Allen Bradley or equiv. | CB4705 |
| 7R906 and 7R911 | RESISTOR, 2.74K ±1%, 1/8W | IRC or equiv. | MEA-T2 |
| 7R907 | POTENTIOMETER, 0-500 ohm, 1W | IRC | 201-201 |
| 7R908 and 7R909 | RESISTOR, 100 ohm ±5%, 1/4W | Allen Bradley or equiv. | CB1015 |
| 7R912 | RESISTOR, 34.8K ±1%, 1/8W | IRC or equiv. | MEA-T2 |
| 7R913 | RESISTOR, 1.37K ±1%, 1/8W | IRC or equiv. | MEA-T2 |
| 7R914 | RESISTOR, 3K ±5%, 1/4W | Allen Bradley or equiv. | CB3025 |
| 7R915 | RESISTOR, 30K ±5%, 1/4W | Allen Bradley or equiv. | CB3035 |
| | TRANSIPAD | Milton Ross | A10028 |
| | TRANSIPAD | Delbert Blinn | TP-100 |
| | PRINTED-CIRCUIT CARD | EMR | 210-0017 |

Table 6-6. Model 210A Secondary Card Assembly (Ref. Figure 5-17)

| CIRCUIT SYMBOL NO. | DESCRIPTION | MANUFACTURER | |
|---|---|---|---|
| | | NAME | PART NO. |
| | SECONDARY CARD ASSEMBLY | EMR | 210-0012 |
| 2CR602, 2CR604, 2CR801 and 2CR802 | DIODE | Transitron | 1N457 |
| 2CR603 | DIODE | Transitron | 1N755A |
| 2CR605, 2CR606, 2CR703, 2CR704, 2CR705 and 2CR706 | DIODE | Transitron | 1N276 |
| 2CR607 and 2CR608 | DIODE | * | 951 |
| 2CR701 | DIODE | EMR | 951-6008 |
| 2CR803 and 2CR804 | DIODE, Zener, 9.0V ±5%, 500 Mw | Transitron | 1N936A |
| 2C604 | CAPACITOR, 0.33µf ±20%, 200V | Dearborn | XIP334M2 |
| 2C605 | CAPACITOR, 100Pf ±10%, 500V | Arco | DM15-101K |
| 2C606 | CAPACITOR, 390 Pf ±10%, 500V | Arco | DM15-391K |
| 2C607, 2C608, 2C609, 2C611 and 2C705 | CAPACITOR, 0.01µf ±20%, 200V | Dearborn | XIP103M2 |
| 2C610, 2C617, 2C703 and 2C704 | CAPACITOR, 150Pf ±10%, 500V | Arco | DM15-151K |
| 2C612 | CAPACITOR, 1000 Pf ±10%, 100V | Arco | DM15-102K |
| 2C613 and 2C702 | CAPACITOR, 0.1µf ±20%, 200V | Dearborn | XIP104M2 |
| 2C614 and 2C615 | CAPACITOR, 22µf ±20%, 35V, Type 150D | Sprague | 226X0035R2 |
| 2C616 | CAPACITOR, 6.8µf ±20%, 35V, Type 150D | Sprague | 685X0035B2 |
| 2C701 | CAPACITOR, 33Pf ±5%, 500V | Arco | DM15-330J |
| 2C706, 2C711 and 2C712 | CAPACITOR, 120µf ±20%, 10V, Type 150D | Sprague | 127X0010R2 |
| 2C707 and 2C708 | CAPACITOR, 6200 Pf ±20%, 200V | Dearborn | XIP622M2 |
| 2C713 | CAPACITOR, 47Pf ±10%, 500V | Arco | DM15-470K |
| 2C801 and 2C802 | CAPACITOR, 100µf ±20%, 20V, Type 150D | Sprague | 107X0020S2 |
| 2Q601 | TRANSISTOR | Texas Inst. | 2N929 |
| 2Q602, 2Q603, 2Q606, 2Q702, 2Q703, 2Q704, 2Q705, 2Q708, | TRANSISTOR | RCA | 2N404 |

Table 6-6 (Cont'd.). Model 210A Secondary Card Assembly (Ref. Figure 5-17)

| CIRCUIT SYMBOL NO. | DESCRIPTION | MANUFACTURER | |
|---|---|---|---|
| | | NAME | PART NO. |
| 2Q710, 2Q711, 2Q802, 2Q803, 2Q804, 2Q806 and 2Q812 | TRANSISTOR | Texas Inst. | 2N1304 |
| 2Q604, 2Q605, 2Q608, 2Q611, 2Q612, 2Q706, 2Q709, 2Q805, 2Q808, 2Q809, 2Q810 and 2Q811 | TRANSISTOR | RCA | 2N3638A |
| 2Q607, 2Q610 and 2Q613 | TRANSISTOR | Motorola | MJ490 |
| 2Q609 and 2Q801 | TRANSISTOR | Motorola | MJ480 |
| 2Q614 and 2Q807 | TRANSISTOR | Philco | 2N2280 |
| 2Q701 | RESISTOR, 22 Meg ±5%, 1/4W | Allen Bradley | CB2265 |
| 2R606 | RESISTOR, 1.8 Meg ±5%, 1/4W | Allen Bradley | CB1855 |
| 2R607 | RESISTOR, 15K ±5%, 1/4W | Allen Bradley | CB1535 |
| 2R608, 2R701, 2R704 and 2R722 | RESISTOR, 6.8K ±5%, 1/4W | Allen Bradley | CB6825 |
| 2R609 and 2R720 | RESISTOR, 680 ohm ±5%, 1/4W | Allen Bradley | CB6815 |
| 2R610, 2R615, 2R638, 2R642 and 2R729 | RESISTOR, 330 ohm ±5%, 1/4W | Allen Bradley | CB3315 |
| 2R611, 2R623, 2R640, 2R708, 2R802 and 2R813 | RESISTOR, 100 ohm ±5%, 1/4W | Allen Bradley | CB1015 |
| 2R612 | RESISTOR, 470 ohm ±5%, 1/4W | Allen Bradley | CB4715 |
| 2R613, 2R641, 2R646, 2R805 and 2R816 | RESISTOR, 33 ohm ±5%, 1/4W | Allen Bradley | CB3305 |
| 2R614, 2R639, 2R723 and 2R725 | | | |

Table 6-6 (Cont'd.). Model 210A Secondary Card Assembly (Ref. Figure 5-17)

| CIRCUIT SYMBOL NO. | DESCRIPTION | MANUFACTURER | |
|---|---|---|---|
| | | NAME | PART NO. |
| 2R616, 2R627, 2R635, 2R643, 2R702, 2R715, 2R716, 2R717 and 2R718 | RESISTOR, 10K ±5%, 1/4W | Allen Bradley | CB1035 |
| 2R617 and 2R645 | RESISTOR, 100 ohm ±5%, 1W | Allen Bradley | GB1015 |
| 2R619 and 2R647 | RESISTOR, 33 ohm ±3%, 10W (Used on all models except Model 210A-04-M25) | Dale | RS10 |
| 2R619 and 2R647 | RESISTOR, 16 ohm ±3%, 10W (Used on Model 210A-04-M25 only) | Dale | RS10 |
| 2R620, 2R621 and 2R709 | RESISTOR, 47K ±5%, 1/4W | Allen Bradley | CB4735 |
| 2R622 | RESISTOR, 560 ohm ±5%, 1/4W | Allen Bradley | CB5615 |
| 2R624 and 2R630 | RESISTOR, 47 ohm ±5%, 1/4W | Allen Bradley | CB4705 |
| 2R625, 2R631 and 2R637 | RESISTOR, 220 ohm ±5%, 1/4W | Allen Bradley | CB2215 |
| 2R626 and 2R633 | RESISTOR, 10 ohm ±5%, 2W (Used on all models except Model 210A-04-M25) | Allen Bradley | HB1005 |
| 2R626 and 2R633 | RESISTOR, 5.6 ohm ±3%, 3W (Used on Model 210A-04-M25 only) | Sage or Dale | RS-2 |
| 2R628, 2R703, 2R731, 2R734, 2R804 and 2R815 | RESISTOR, 1K±5%, 1/4W | Allen Bradley | CB1025 |
| 2R629 | RESISTOR, 180 ohm ±5%, 1/4W | Allen Bradley | CB1815 |
| 2R634 | RESISTOR, 33K ±5%, 1/4W | Allen Bradley | CB3335 |
| 2R644 and 2R712 | RESISTOR, 1.5K ±5%, 1/4W | Allen Bradley | CB1525 |
| 2R648 | RESISTOR, 100 ohm ±1%, 3W | Dale | RS-2 |
| 2R649, 2R652 and 2R706 | RESISTOR, 2.2K ±5%, 1/4W | Allen Bradley | CB2225 |
| 2R650, 2R651 and 2R719 | RESISTOR, 1.8K ±5%, 1/4W | Allen Bradley | CB1825 |
| 2R653 | RESISTOR, 100K ±1% (Used on 210A-01-M8 only) | IRC or equiv. | EM-70 |
| 2R705 and 2R726 | RESISTOR, 8.2K ±5%, 1/4W | Allen Bradley | CB8225 |
| 2R707 2R728 and 2R733 | RESISTOR, 5.6K ±5%, 1/4W | Allen Bradley | CB5625 |
| 2R710 and 2R714 | RESISTOR, 18K ±5%, 1/4W | Allen Bradley | CB1835 |

Table 6-6 (Cont'd.). Model 210A Secondary Card Assembly (Ref. Figure 5-17)

| CIRCUIT SYMBOL NO. | DESCRIPTION | MANUFACTURER | |
|---|---|---|---|
| | | NAME | PART NO. |
| 2R711 and 2R713 | RESISTOR, 1.5K ±5%, 1/2W | Allen Bradley | EB1525 |
| 2R721, 2R808, 2R809, 2R810, 2R819, 2R820 and 2R821 | RESISTOR, 4.7K ±5%, 1/4W | Allen Bradley | CB4725 |
| 2R724 | RESISTOR, 3.9K ±5%, 1/4W | Allen Bradley | CB3925 |
| 2R730 | RESISTOR, 390 ohm ±5%, 1/4W | Allen Bradley | CB3915 |
| 2R732 | RESISTOR, 500 ohm ±20%, 1/4W | Allen Bradley | RP |
| 2R801 and 2R812 | RESISTOR, 3.3K ±5%, 1/4W | Allen Bradley | CB3325 |
| 2R803 and 2R814 | RESISTOR, 3 9 ohm ±5%, 1W | Allen Bradley | GB3925 |
| 2R806 and 2R817 | RESISTOR, 909 ohm ±1%, 1/4W | IRC | MEA-T2 |
| 2R807 and 2R818 | RESISTOR, 250 ohm ±20%, 1/4W | Allen Bradley | RP |
| | TRANSIPAD | Milton Ross | A-10044 |
| | TRANSIPAD | Milton Ross | A-10028 |
| | HEAT SINK, Power Regulator | EMR | 210-1017 |
| | PRINTED-CIRCUIT CARD | EMR | 210-1003 |

Table 6-7. Model 210B Channel Selector Assemblies (Ref. Figure 5-19)

| CIRCUIT SYMBOL NO. | DESCRIPTION | MANUFACTURER | |
|---|---|---|---|
| | | NAME | PART NO. |
| | MODEL 210B-01 CHANNEL SELECTOR ASSEMBLY | EMR | 210-0210-1 |
| | MODEL 210B-02 CHANNEL SELECTOR ASSEMBLY | EMR | 210-0220-1 & 210-0220-2 |
| | MODEL 210B-05 CHANNEL SELECTOR ASSEMBLY | EMR | 210-0210-4 |
| | MODEL 210B-06 CHANNEL SELECTOR ASSEMBLY | EMR | 5677-1 |
| | MODEL 210B-07 CHANNEL SELECTOR ASSEMBLY | EMR | 210-0220-3 |
| | MODEL 210B-11 CHANNEL SELECTOR ASSEMBLY | EMR | 3845 |
| | MODEL 210B-21 CHANNEL SELECTOR ASSEMBLY | EMR | 3845-1 |
| | FRONT PANEL ASSEMBLY (Used on Model 210B-01, 210B-05 and 210B-06) | EMR | 210-0211 |
| 5R421 | POTENTIOMETER, Multi-turn, 2.5K (Used on units with deviation of less than 10%) | EMR | 945-0018 |
| 5R421 | POTENTIOMETER, Multi-turn 4K (Used on units with deviation greater than 10%) | EMR | 945-0019 |
| | FRONT PANEL ASSEMBLY (Used on Models 210B-02 and 210B-07) | EMR | 210-0221 |
| 5R421 | POTENTIOMETER, Multi-turn, 2.5K (Used on units with deviation of less than 10%) | EMR | 945-0018 |
| 5R421 | POTENTIOMETER, Multi-turn, 4K (Used on units with deviations greater than 10%) | EMR | 945-0019 |
| 5SW201 | SWITCH | Grayhill | 45001-6 |
| | FRONT PANEL ASSEMBLY (Used on Models 210B-11 and 210B-21) | EMR | 3846 |
| R1 | POTENTIOMETER, Multi-turn, 4K | EMR | 945-0019 |
| S1 | SWITCH (Used on Model 210B-11) | Oak | 247022-J12 |

Table 6-7 (Cont'd.). Model 210B Channel Selector Assemblies (Ref. Figure 5-19)

| CIRCUIT SYMBOL NO. | DESCRIPTION | MANUFACTURER | |
|---|---|---|---|
| | | NAME | PART NO. |
| S1 | SWITCH (Used on Model 210B-21) | Oak | 247023-512 |
| | PRINTED-CIRCUIT CARD ASSEMBLY (Used on Models 210B-01 and 210B-05 for frequencies up to 2.3 Kc; see Table 6-8 for breakdown) | EMR | 210-0213 |
| | PRINTED-CIRCUIT CARD ASSEMBLY (Used on Model 210B-01 for frequencies of 2.3 Kc and above; see Table 6-8 for breakdown) | EMR | 210-0212 |
| | PRINTED-CIRCUIT CARD ASSEMBLY (Used on Model 210B-02 for frequencies up to 2.3 Kc; see Table 6-9 for breakdown) | EMR | 210-0223 |
| | PRINTED-CIRCUIT CARD ASSEMBLY (Used on Model 210B-02 for frequencies of 2.3 Kc and above; see Table 6-9 for breakdown) | EMR | 210-0222 |
| | PRINTED-CIRCUIT CARD ASSEMBLY (Used on Model 210B-06; see Table 6-10 for breakdown) | EMR | 5997 |
| | PRINTED-CIRCUIT CARD ASSEMBLY (Used on Model 210B-07; see Table 6-11 for breakdown) | EMR | 5609 |
| | PRINTED-CIRCUIT CARD ASSEMBLY (Used on Model 210B-11; see Table 6-12 for breakdown) | EMR | 3848 |
| | PRINTED-CIRCUIT CARD ASSEMBLY (Used on Model 210B-21; see Table 6-13 for breakdown) | EMR | 4674 |

Table 6-8. Models 210B-01 and 210B-05 Printed-Circuit-Card Assemblies (Ref. Figures 5-20 and 5-21)

| CIRCUIT SYMBOL NO. | DESCRIPTION | MANUFACTURER | |
|---|---|---|---|
| | | NAME | PART NO. |
| | PRINTED-CIRCUIT CARD ASSEMBLY (Used on Model 210B-01 and 210B-05 for frequencies up to 2.3 Kc) | EMR | 210-0213 |
| | PRINTED-CIRCUIT CARD ASSEMBLY (Used on Model 210B-01 for frequencies of 2.3 Kc and above) | EMR | 210-0212 |
| 5CR101 | DIODE | Transitron | 1N457 |
| 5C101 and 5C107 | CAPACITOR, 3.3 µf ±20%, 15V Type 150D | Sprague | 335X0015A2 |
| 5C115, 5C203, 5C204, 5C205, 5C407, 5C408, 5C409, 5C411 and 5C412 | CAPACITOR (Used on units with frequencies below 2.3 Kc; see Table 6-30 for values and types) | | |
| 5C115, 5C203, 5C204, 5C407, 5C409, 5C411 and 5C412 | CAPACITOR (Used on units with frequencies of 2.3 Kc and above; see Table 6-30 for values and types) | | |
| 5C410 | CAPACITOR, 1000 Pf ±10%, 100V | Arco | DM15-102K |
| 5FL101 | FILTER (Model 210B-01 only) | | |
| | a. Less than 5% deviation (See Table 6-8A for breakdown) | EMR | 10854 or 10854-1 |
| | b. 5% or greater deviation (See Table 6-8B for breakdown) | EMR | 10847 or 10847-1 |
| | c. Optional: (Value and type determined by customer ordering information) | EMR | 840-0003 |
| 5L101 | COIL (See Table 6-30 for value and type) | Delevan | |
| 5Q101, 5Q102, 5Q403 and 5Q404 | TRANSISTOR | RCA | 2N404 |
| 5Q103 | TRANSISTOR | Texas Inst. | 2N1304 |
| 5R101, 5R116, 5R117 and 5R410 | RESISTOR, 6.8K ±5%, 1/4W | Allen Bradley | CB6825 |
| 5R102 and 5R125 | RESISTOR, 220 ohms ±5%, 1/4W | Allen Bradley | CB2215 |
| 5R108, 5R118 and 5R425 | RESISTOR, 47 ohms ±5%, 1/4W | Allen Bradley | CB4705 |
| 5R136 | RESISTOR (See Table 6-30 for value and type) | Allen Bradley | |
| 5R206 | RESISTOR, 8.2K ±5%, 1/4W | Allen Bradley | CB8225 |

Table 6-8 (Cont'd.). Models 210B-01 and 210B-05 Printed-Circuit-Card Assemblies (Ref. Figures 5-20 and 5-21)

| CIRCUIT SYMBOL NO. | DESCRIPTION | MANUFACTURER | |
|---|---|---|---|
| | | NAME | PART NO. |
| 5R411 | RESISTOR, ±5%, 1/4W (Factory adjustment, range is 82K 59 4.7 Meg) | Allen Bradley | CB |
| 5R412 | RESISTOR, ±1%, 1/4W (Factory adjustment range is 19.1K thru 24.9K) | IRC | MEA-T0 |
| 5R417 | RESISTOR, 2.15K ±1%, 1/4W | IRC | MEA-T2 |
| 5R418 | RESISTOR, 6.81K ±1%, 1/4W | IRC | MEA-T0 |
| 5R420 and 5R422 | RESISTOR, ±1%, 1/4W (See Table 6-30 for value and type) | IRC | MEA-T2 |
| 5R424 | RESISTOR, 4.64K ±1%, 1/4W | IRC | MEA-T2 |
| 5R426 and 5R427 | RESISTOR, 14K ±1%, 1/4W | IRC | MEA-T2 |
| | TRANSIPAD | Milton Ross | A10028 |
| | PRINTED-CIRCUIT CARD (Used on units with frequencies below 2.3 Kc) | EMR | 210-1204-1 |
| | PRINTED-CIRCUIT CARD (Used on units with frequencies of 2.3 Kc and above) | EMR | 210-1203-1 |

Table 6-8A. Less Than Five-Percent Deviation BPIF Printed-Wiring Assembly for Models 210B-01 or 210B-02 (Ref. Figures 5-67 and 5-68)

| CIRCUIT SYMBOL NO. | DESCRIPTION | MANUFACTURER | |
|---|---|---|---|
| | | NAME | PART NO. |
| | PRINTED-WIRING ASSEMBLY, 2 x 2 Pole Pair, Staggered | EMR | 10854 (Rev. B) |
| | PRINTED-WIRING ASSEMBLY, 2 x 2 Pole Pair, Staggered | EMR | 10854-1 |
| C1 thru C4 | CAPACITOR, Frequency Variable | | |
| C5 and C6 | CAPACITOR, 0.1 µf ±20%, 50V | Erie | 8121-050-651-103M |
| C7 and C8 | CAPACITOR, Frequency Variable | | |
| L1 thru L4 | COIL, Frequency Variable | | |
| R1 thru R10 | RESISTOR, Frequency Variable | | |
| U1 | INTEGRATED CIRCUIT ASSEMBLY, Follower, PNP (Used on 10854-1 only) | EMR | 12182 |
| U2 | INTEGRATED CIRCUIT ASSEMBLY, Follower, NPN | EMR | 12181 |

Table 6-8B. Five-Percent, or Greater, Deviation BPIF Printed-Wiring Assembly for Models 210B-01 or 210B-02 (Ref. Figures 5-69 and 5-70)

| CIRCUIT SYMBOL NO. | DESCRIPTION | MANUFACTURER | |
|---|---|---|---|
| | | NAME | PART NO. |
| | PRINTED-WIRING ASSEMBLY, BPIF 4 Pole Pair | EMR | 10847 (Rev. A) |
| | PRINTED-WIRING ASSEMBLY, BPIF 4 Pole Pair | EMR | 10847-1 |
| C1 thru C5 | CAPACITOR, Frequency Variable | | |
| C6 and C7 | CAPACITOR, 0.1 μf ±20%, 50V | Erie | 8121-050-651-103M |
| C8 | CAPACITOR, Frequency Variable | | |
| L1 thru L4 | COIL, Frequency Variable | | |
| R1 and R2 | RESISTOR, Frequency Variable | | |
| U1 | INTEGRATED CIRCUIT ASSEMBLY, Follower, PNP (Used on 10847-1 only) | EMR | 12182 |

Table 6-9. Model 210B-02 Printed-Circuit-Card Assembly
(Ref. Figures 5-24 and 5-25)

| CIRCUIT SYMBOL NO. | DESCRIPTION | MANUFACTURER | |
|---|---|---|---|
| | | NAME | PART NO. |
| | PRINTED-CIRCUIT CARD ASSEMBLY (Used on Model 210B-02 for frequencies up to 2.3 Kc) | EMR | 210-0223 |
| | PRINTED-CIRCUIT CARD ASSEMBLY (Used on Model 210B-02 for frequencies of 2.3 Kc and above) | EMR | 210-0222 |
| 5CR101 | DIODE | Transitron | 1N457 |
| 5C101 and 5C107 | CAPACITOR, 3.3 μf ±20%, 15V Type 150D | Sprague | 335X0015A2 |
| 5C115, 5C203, 5C204, 5C205, 5C208, 5C209, 5C407, 5C408, 5C409, 5C411 and 5C412 | CAPACITOR (Used on units with frequencies below 2.3 Kc, see Table 6-30 for values and types) | | |
| 5C115, 5C203, 5C204, 5C208, 5C209, 5C407, 5C409, 5C411 and 5C412 | CAPACITOR (Used on units with frequencies of 2.3 Kc and above, see Table 6-30 for values and types) | | |
| 5C410 | CAPACITOR, 1000 Pf ±10%, 100V | Arco | DM15-102K |
| 5FL101 | FILTER | | |
| | a. Less than 5% deviation (See Table 6-8A for breakdown) | EMR | 10854 or 10854-1 |
| | b. 5% or greater deviation (See Table 6-8B for breakdown) | EMR | 10847 or 10847-1 |
| | c. Optional: (Value and type determined by customer ordering information) | EMR | 840-0003 |
| 5L101 | COIL (See Table 6-30 for value and type) | Delevan | |
| 5Q101, 5Q102, 5Q403 and 5Q404 | TRANSISTOR | RCA | 2N404 |
| 5Q103 | TRANSISTOR | Texas Inst. | 2N1304 |
| 5R101, 5R116, 5R117 and 5R410 | RESISTOR, 6.8K ±5%, 1/4W | Allen Bradley | CB6825 |
| 5R102 and 5R125 | RESISTOR, 220 ohms ±5%, 1/4W | Allen Bradley | CB2215 |
| 5R108, 5R118 and 5R425 | RESISTOR, 47 ohms ±5%, 1/4W | Allen-Bradley | CB4705 |

Table 6-9 (Cont'd.). Model 210B-02 Printed-Circuit-Card Assembly
(Ref. Figures 5-24 and 5-25)

| CIRCUIT SYMBOL NO. | DESCRIPTION | MANUFACTURER | |
|---|---|---|---|
| | | NAME | PART NO. |
| 5R136 | RESISTOR (See Table 6-30 for value and type) | Allen Bradley | CB |
| 5R206 | RESISTOR, 8.2K ±5%, 1/4W | Allen Bradley | CB8225 |
| 5R226 and 5R228 | RESISTOR, 91 ohms ±5%, 1/4W | Allen Bradley | CB9105 |
| 5R229 | RESISTOR, 120 ohms ±5%, 1/4W | Allen Bradley | CB1215 |
| 5R230 | RESISTOR, 68 ohms ±5%, 1/4W | Allen Bradley | CB6805 |
| 5R231 | RESISTOR, 360 ohms ±5%, 1/4W | Allen Bradley | CB3615 |
| 5R232 | RESISTOR, 620 ohms ±5%, 1/4W | Allen Bradley | CB6215 |
| 5R233 | RESISTOR, 39 ohms ±5%, 1/4W | Allen Bradley | CB3905 |
| 5R234 | RESISTOR, 1.2K ±5%, 1/4W | Allen Bradley | CB1225 |
| 5R235 | RESISTOR, 910 ohms ±5%, 1/4W | Allen Bradley | CB9115 |
| 5R411 | RESISTOR, ±5%, 1/4W (Factory adjustment, range is 82K to 4.7 Meg) | Allen Bradley | CB |
| 5R412 | RESISTOR, ±1%, 1/4W (Factory adjustment, range is 19.1K thru 24.9K) | IRC | MEA-T0 |
| 5R417 | RESISTOR, 2.15K ±1%, 1/4W | IRC | MEA-T0 |
| 5R418 | RESISTOR, 6.81K ±1%, 1/4W | IRC | MEA-T0 |
| 5R420 and 5R422 | RESISTOR, ±1%, 1/4W (See Table 6-30 for value and type) | IRC | MEA-T2 |
| 5R424 | RESISTOR, 4.64K ±1%, 1/4W | IRC | MEA-T0 |
| 5R426 and 5R427 | RESISTOR, 14K ±1%, 1/4W | IRC | MEA-T2 |
| | TRANSIPAD | Milton Ross | A10028 |
| | PRINTED-CIRCUIT CARD (Used for frequencies below 2.3 Kc) | EMR | 210-1204-1 |
| | PRINTED-CIRCUIT CARD (Used for frequencies of 2.3 Kc and above) | EMR | 210-1203-1 |

Table 6-10. Model 210B-06 Printed-Circuit-Card Assembly (Refer to Figure 5-27)

| CIRCUIT SYMBOL NO. | DESCRIPTION | MANUFACTURER | |
|---|---|---|---|
| | | NAME | PART NO. |
| | PRINTED-CIRCUIT CARD ASSEMBLY | EMR | 5997 (Rev. F) |
| 5C101, 5C103, 5C105, and 5C106 | CAPACITOR, 0.1 µf ±20%, 35V | * | 601 |
| 5C102 | CAPACITOR, 0.11 µf ±10%, 100V | Sprague | 151D114X-9100W2 |
| 5C104 | CAPACITOR, Test Variable, 3 thru 15 Pf ±10%, 500V | * | 600 |
| 5C107, 5C203, 5C204, 5C205, 5C407, 5C408, 5C409, 5C411, and 5C412 | CAPACITOR, (See Table 6-30 for value and type) | | |
| 5C410 | CAPACITOR, 1000 Pf ±2%, 100V | * | 600 |
| 5CR101 and 5CR102 | DIODE | * | 814 |
| 5Q403 and 5Q404 | TRANSISTOR, 2N404 | * | 649 |
| 5R101 and 5R117 | RESISTOR, 10 ohms ±5%, 1/4W | Allen-Bradley | RC07GF100J |
| 5R106, 5R118, and 5R119 | RESISTOR, 100 ohms ±5%, 1/4W | Allen-Bradley | RC07GF101J |
| 5R206 | RESISTOR, 8.2K ±5%, 1/4W | Allen-Bradley | RC07GF822J |
| 5R410 | RESISTOR, 6.8K ±5%, 1/4W | Allen-Bradley | RC07GF682J |
| 5R411 | RESISTOR, Selected in test ±5%, 1/4W | Allen-Bradley | RC07GF(X)J |
| 5R412 | RESISTOR, Selected in test ±1%, 1/8W | * | 625 |
| 5R417 | RESISTOR, 2.15K ±1%, 1/8W | * | 625 |
| 5R418 | RESISTOR, 6.81K ±1%, 1/8W | * | 625 |
| 5R420 and 5R422 | RESISTOR, (See Table 6-30 for value and type) | | |
| 5R424 | RESISTOR, 4.64K ±1%, 1/8W | * | 625 |
| 5R425 | RESISTOR, 47 ohms ±5%, 1/4W | Allen-Bradley | RC07GF470J |
| 5R426 and 5R427 | RESISTOR, 14.0K ±1%, 1/8W | * | 625 |
| 5FL101 | FILTER: | | |
| | a. For center frequencies greater than 2.3 KHz and deviations less than 5%. | EMR | 10854 |
| | b. For center frequencies greater than 2.3 KHz and deviations equal to or greater than 5%. | EMR | 10847-1 |
| | c. For frequencies equal to or less than 2.3 KHz and optional at frequencies greater than 2.3 KHz: | | |
| | 1. For all IRIG channels and channels with deviations of ±7.5% or greater. | EMR | 3529-1 |
| | 2. For all constant bandwidth channels and channels with deviations of less than ±7.5%. | EMR | 3529-4 |
| 5A101 | PRINTED-WIRING MODULE, FOLLOWER NO. 1 (See Table 6-11 for breakdown) | EMR | 6365 |
| 5A102 | PRINTED-WIRING MODULE, FOLLOWER NO. 2 (See Table 6-12 for breakdown) | EMR | 5397 |
| 5R120 | RESISTOR, 39K ±5%, 1/4W (Used when center frequency is 10 KHz or lower) | Allen-Bradley | RC07GF393J |

*Refer to Approved Vendor's List, Table 6-15.

Table 6-11. Follower No. 1 Printed-Wiring Module (Ref. Figure 5-29)

| CIRCUIT SYMBOL NO. | DESCRIPTION | MANUFACTURER | |
|---|---|---|---|
| | | NAME | PART NO. |
| | PRINTED WIRING MODULE ASSEMBLY, FOLLOWER NO. 1 (Used on Model 210B-06 and 210B-07) | EMR | 5397 |
| CR1 and CR2 | DIODE | * | 814 |
| Q1 and Q2 | TRANSISTOR | Fairchild | 2N3565 |
| Q3 | TRANSISTOR | Motorola | MPS 6522 |
| R1 | RESISTOR, 100 ohm ±5%, 1/4W | | RC07GF101J |
| R2 | RESISTOR, 220 ohm ±5%, 1/4W | | RC07GF221J |
| R3 and R4 | RESISTOR, 51 ohm ±5%, 1/4W | | RC07GF510J |
| R5 | RESISTOR, 9.1K ±5%, 1/4W | | RC07GF912J |

Table 6-12. Follower No. 2 Printed-Wiring Module Assembly (Refer to Figure 5-31)

| CIRCUIT SYMBOL NO. | DESCRIPTION | MANUFACTURER | |
|---|---|---|---|
| | | NAME | PART NO. |
| | PRINTED-WIRING MODULE ASSEMBLY, FOLLOWER NO. 2 (Used on Model 210B-06, 210B-07, 210T-06, 210T-07, and 210T-08) | EMR | 6365 |
| C1 | CAPACITOR, 6.8 µf ±20%, 6V | * | 601 |
| CR1 and CR2 | DIODE | * | 814 |
| Q1 and Q2 | TRANSISTOR | Fairchild | 2N3565 |
| Q3 | TRANSISTOR | Motorola | MPS 6522 |
| R1 | RESISTOR, 4.7K ±5%, 1/4W | | RC07GF472J |
| R2 | RESISTOR, 100 ohm ±5%, 1/4W | | RC07GF101J |
| R3 | RESISTOR, 10 ohm ±5%, 1/4W | | RC07GF100J |
| R4 and R6 | RESISTOR, 5.1 ohm ±5%, 1/4W | | RC07GF510J |
| R5 and R7 | RESISTOR, 5.1K ±5%, 1/4W | | RC07GF512J |
| R8 | RESISTOR, 9.1K ±5%, 1/4W | | RC07GF912J |

Table 6-13. Model 210B-07 Printed-Circuit-Card Assembly (Refer to Figure 5-33)

| CIRCUIT SYMBOL NO. | DESCRIPTION | MANUFACTURER | |
|---|---|---|---|
| | | NAME | PART NO. |
| | PRINTED-CIRCUIT CARD ASSEMBLY | EMR | 5609 (Rev. F) |
| 5A101 | PRINTED-WIRING MODULE, FOLLOWER NO. 1 | EMR | 6365 |
| 5A102 | PRINTED-WIRING MODULE, FOLLOWER NO. 2 | EMR | 5397 |
| 5C101, 5C103, 5C105, and 5C106 | CAPACITOR, 0.1 µf ±20%, 35V | * | 601 |
| 5C102 | CAPACITOR, 0.11 µf ±10%, 100V | Sprague | 151D114X-9100W2 |
| 5C104 | CAPACITOR, Value selected in test (Range 3 Pf thru 15 Pf) ±10%, 500V | * | 600 |
| 5C107, 5C203, 5C204, 5C205, 5C208, 5C209, 5C407, 5C408, 5C409, 5C411, and 5C412 | CAPACITOR (See Table 6-30 for value and range) | | |
| 5CR101 and 5CR102 | DIODE | * | 814 |
| 5FL101 | FILTER: | | |
| | a. For center frequencies greater than 2.3 KHz and deviations less than 5%. | EMR | 10854 |
| | b. For center frequencies greater than 2.3 KHz and deviations equal to or greater than 5%. | EMR | 10847-1 |
| | c. For frequencies equal to or less than 2.3 KHz and optional at frequencies greater than 2.3 KHz: | | |
| | 1. For all IRIG channels and channels with deviations of ±7.5% or greater. | EMR | 3529-1 |
| | 2. For all constant bandwidth channels and channels with deviations of less than ±7.5%. | EMR | 3529-4 |
| 5Q403 | TRANSISTOR (2N404) | * | 649 |
| 5Q404 | TRANSISTOR (2N404) | * | 649 |
| 5R101 and 5R117 | RESISTOR, 10 ohms ±5%, 1/4W | Allen-Bradley | RC07GF100J |
| 5R106, 5R108, and 5R109 | RESISTOR, 100 ohms ±5%, 1/4W | Allen-Bradley | RC07GF101J |
| 5R120 | RESISTOR, 39K ±5%, 1/4W (Used when center frequency is 10 Kc or lower) | Allen-Bradley | RC07GF393J |
| 5R206 | RESISTOR, 8.2K ±5%, 1/4W | Allen-Bradley | RC07GF822J |
| 5R226 and 5R228 | RESISTOR, 91 ohms ±5%, 1/4W | Allen-Bradley | RC07GF910J |
| 5R229 | RESISTOR, 120 ohms ±5%, 1/4W | Allen-Bradley | RC07GF121J |
| 5R230 | RESISTOR, 68 ohms ±5%, 1/4W | Allen-Bradley | RC07GF680J |
| 5R231 | RESISTOR, 360 ohms ±5%, 1/4W | Allen-Bradley | RC07GF361J |
| 5R232 | RESISTOR, 620 ohms ±5%, 1/4W | Allen-Bradley | RC07GF621J |
| 5R233 | RESISTOR, 39 ohms ±5%, 1/4W | Allen-Bradley | RC07GF390J |
| 5R234 | RESISTOR, 1.2K ±5%, 1/4W | Allen-Bradley | RC07GF122J |
| 5R235 | RESISTOR, 910 ohms ±5%, 1/4W | Allen-Bradley | RC07GF911J |
| 5R410 | RESISTOR, 6.8K ±5%, 1/4W | Allen-Bradley | RC07GF682J |
| 5R411 | RESISTOR (Value selected in test) ±5%, 1/4W | Allen-Bradley | RC07GF(X)J |

*Refer to Approved Vendor's List, Table 6-45.

Table 6-13 (Cont'd.). Model 210B-07 Printed-Circuit-Card Assembly (Refer to Figure 5-33)

| CIRCUIT SYMBOL NO. | DESCRIPTION | MANUFACTURER | |
|---|---|---|---|
| | | NAME | PART NO. |
| 5R412 | RESISTOR, (Value selected in test) ±1%, 1/8W | | 625 |
| 5R417 | RESISTOR, 2.15K ±1%, 1/8W | | 625 |
| 5R418 | RESISTOR, 6.81K ±1%, 1/8W | | 625 |
| 5R420 | RESISTOR, (See Table 6-30 for value and type) | | |
| 5R422 | RESISTOR, (See Table 6-30 for value and type) | | |
| 5R424 | RESISTOR, 4.64K ±1%, 1/8W | | 625 |
| 5R425 | RESISTOR, 47Ω ±5%, 1/4W | | RC07GF470J |
| 5R426 | RESISTOR, 14.0K ±1%, 1/8W | | 625 |
| 5R427 | RESISTOR, 14.0K ±1%, 1/8W | | 625 |

Table 6-14. Model 210B-11 Channel Selector Printed-Circuit-Card Assembly (Ref. Figure 5-35)

| CIRCUIT SYMBOL NO. | DESCRIPTION | MANUFACTURER | |
|---|---|---|---|
| | | NAME | PART NO. |
| | PRINTED-CIRCUIT CARD ASSEMBLY | EMR | 3848 |
| 5C901, 5C914, and 5C918 | CAPACITOR, 6.8 µf ±20%, 35V | * | 601 |
| 5C902 | CAPACITOR, 27 Pf ±2%, 500V | * | 600 |
| 5C903, 5C904, 5C905, and 5C908 | CAPACITOR, 100 Pf ±2%, 500V | * | 600 |
| 5C906 | CAPACITOR, 22 Pf ±2%, 500V | * | 600 |
| 5C910 | CAPACITOR, 1000 Pf ±2%, 100V | * | 600 |
| 5C911 | CAPACITOR, .0047 µf ±1%, 200V | * | 632 |
| 5C912 | CAPACITOR, .01 µf ±1%, 200V | * | 632 |
| 5C913 | CAPACITOR, 47 Pf ±2%, 500V | * | 600 |
| 5C915 | CAPACITOR, 22 µf ±20%, 35V | * | 601 |
| 5C916 and 5C917 | CAPACITOR, 1 µf ±20%, 35V | * | 601 |
| 5C922 | CAPACITOR, 10,400 Pf ±1%, 200V | Electro-Cube | 210D1C |
| 5C923 | CAPACITOR, 5200 Pf ±1%, 200V | Electro-Cube | 210D1C |
| 5C924 | CAPACITOR, 2600 Pf ±1%, 200V | Electro-Cube | 210D1C |
| 5C925 | CAPACITOR, 1280 Pf ±1%, 100V | Electro-Cube | 210D1C |
| 5C926 | CAPACITOR, 638 Pf ±1%, 500V | * | 600 |
| 5C927 | CAPACITOR, 318 Pf ±1%, 500V | * | 600 |
| 5C928 | CAPACITOR, .0189 Mf ±1%, 200V | Electro-Cube | 210D1C |
| 5C929 | CAPACITOR, 9460 Pf ±1%, 200V | Electro-Cube | 210D1C |
| 5C930 | CAPACITOR, 4700 Pf ±1%, 200V | Electro-Cube | 210D1C |
| 5C931 | CAPACITOR, 2360 Pf ±1%, 200V | Electro-Cube | 210D1C |
| 5C932 | CAPACITOR, 1180 Pf ±1%, 200V | Electro-Cube | 210D1C |
| 5C933 | CAPACITOR, 585 Pf ±1%, 100V | * | 600 |
| 5CR901 thru 5CR905 | DIODE (FD1031) | * | 814 |
| 5CR906 | DIODE | Transitron | 1N3287 |
| 5CR907 | DIODE (1N457) | * | 639 |
| 5Q901 thru 5Q922 | TRANSISTOR (2N404) | | 649 |
| 5Q902, 5Q903, 5Q904, and 5Q905 | TRANSISTOR | | 2N711B |
| 5Q906, 5Q907, 5Q908, 5Q911, 5Q912, 5Q914, 5Q915, and 5Q916 | TRANSISTOR (2N708) | | 671 |
| 5Q909 | TRANSISTOR | | 2N929 |
| 5Q910 and 5Q913 | TRANSISTOR (2N861) | | 644 |
| 5Q917 and 5Q921 | TRANSISTOR | | 2N2188 |
| 5Q918 | TRANSISTOR (2N1308) | | 829 |

*Refer to Approved Vendor's List, Table 6-45.

Table 6-14 (Cont'd.). Model 210B-11 Channel Selector Printed-Circuit-Card Assembly (Ref. Figure 5-35)

| CIRCUIT SYMBOL NO. | DESCRIPTION | MANUFACTURER | |
|---|---|---|---|
| | | NAME | PART NO. |
| 5Q919 | TRANSISTOR | Motorola | 2N834 |
| 5Q920 | TRANSISTOR (2N1309) | | 648 |
| 5Q923 | TRANSISTOR | | 2N1304 |
| 5R902 and 5R903 | RESISTOR, 4.7K ±5%, 1/4W | MIL-R-11/8 | RC07GF472J |
| 5R904 | RESISTOR, 7.5K ±5%, 1/4W | MIL-R-11/8 | RC07GF752J |
| 5R905 and 5R920 | RESISTOR, 12K ±5%, 1/4W | | RC07GF123J |
| 5R906, 5R907, 5R932, and 5R933 | RESISTOR, 3.3K ±5%, 1/4W | | RC07GF332J |
| 5R908 | RESISTOR, 2K ±1%, 1/10W | | 624 |
| 5R909 | RESISTOR, 180Ω ±5%, 1/4W | | RC07GF181J |
| 5R910 | RESISTOR, 2K ±5%, 1/4W | | RC07GF202J |
| 5R911 | RESISTOR, 2.05K ±1%, 1/10W | | 624 |
| 5R912 and 5R942 | RESISTOR, 3.01K ±1%, 1/10W | | 624 |
| 5R913 | RESISTOR, 100Ω ±5%, 1/4W | | RC07GF101J |
| 5R914 | RESISTOR, 910Ω ±5%, 1/4W | | RC07GF911J |
| 5R915, 5R948, and 5R959 | RESISTOR, 470Ω ±5%, 1/4W | | RC07GF471J |
| 5R916 | RESISTOR, 240K ±5%, 1/4W | | RC07GF244J |
| 5R917 and 5R922 | RESISTOR, 1K ±5%, 1/4W | | RC07GF102J |
| 5R918 | RESISTOR, 3.9K ±5%, 1/4W | | RC07GF392J |
| 5R919 | RESISTOR, 3.83K ±1%, 1/10W | | 624 |
| 5R921 | RESISTOR, 20.5K ±1%, 1/10W | | 624 |
| 5R923 | RESISTOR, 820Ω ±5%, 1/4W | | RC07GF821J |
| 5R924, 5R925, and 5R943 | RESISTOR, 3.16K ±1%, 1/10W | * | 624 |
| 5R926 | RESISTOR, 1.47K ±1%, 1/10W | * | 624 |
| 5R927, 5R938, and 5R940 | RESISTOR, 10K ±5%, 1/4W | | RC07GF103J |
| 5R928, 5R939, and 5R941 | RESISTOR, 1.5K ±5%, 1/4W | | RC07GF152J |
| 5R929, 5R930, 5R954, and 5R955 | RESISTOR, 47Ω ±5%, 1/4W | | RC07GF470J |
| 5R931 and 5R934 | RESISTOR, 47K ±5%, 1/4W | | RC07GF473J |
| 5R935 | RESISTOR, 330Ω ±5%, 1/4W | | RC07GF331J |
| 5R936 | RESISTOR, 17.8K ±1%, 1/10W | * | 624 |
| 5R937 | RESISTOR, 36K ±5%, 1/4W | * | RC07GF363J |
| 5R944 | RESISTOR, 4.64K ±1%, 1/10W | * | 624 |
| 5R945 | RESISTOR, 1.27K ±1%, 1/10W | * | 624 |
| 5R946 | RESISTOR, 620Ω ±5%, 1/4W | | RC07GF621J |
| 5R947 | RESISTOR, 270Ω ±5%, 1/4W | | RC07GF271J |

* Refer to Approved Vendor's List, Table 6-45.

Table 6-14 (Cont'd.). Model 210B-11 Channel Selector Printed-Circuit-Card Assembly (Ref. Figure 5-35)

| CIRCUIT SYMBOL NO. | DESCRIPTION | MANUFACTURER | |
|---|---|---|---|
| | | NAME | PART NO. |
| 5R950 and 5R951 | RESISTOR, 6.8K ±5%, 1/4W | | RC07GF682J |
| 5R952 and 5R958 | RESISTOR, 220Ω ±5%, 1/4W | | RC07GF221J |
| 5R956 | RESISTOR, 6.19K ±1%, 1/10W | * | 624 |
| 5R957 | RESISTOR, 15K ±5%, 1/4W | | RC07GF153J |
| 5R961 | RESISTOR, 20.5K ±1%, 1/10W | * | 624 |
| 5R968 | RESISTOR, Selected in test (15.8K minimum) ±5%, 1/4W | | RC07GF(X)J |
| 5R949 | RESISTOR, Selected in test ±5%, 1/4W | | RC07GF(X)J |
| 5R960 | RESISTOR, 20K ±1%, 1/10W | * | 624 |
| 5R953 | RESISTOR, 5.76K ±1%, 1/10W | * | 624 |
| | PRINTED-WIRING BOARD | EMR | 3850 |
| | TRANSIPAD | * | 800-7 |
| | TRANSIPAD | * | 800-1 |

* Refer to Approved Vendor's List, Table 6-45.

Table 6-15. Model 210B-21 Dual-Deviation BPIF Printed-Circuit-Card Assembly (Ref. Figure 5-37)

| CIRCUIT SYMBOL NO. | DESCRIPTION | MANUFACTURER | |
|---|---|---|---|
| | | NAME | PART NO. |
| | PRINTED-CIRCUIT CARD ASSEMBLY | EMR | 4674 |
| 5C101 and 5C103 | CAPACITOR, 0.01 µf ±10%, 200V | * | 632 |
| 5C203, 5C204, 5C205, 5C206, 5C407, 5C408, 5C409, 5C411, and 5C412 | CAPACITOR, (See Table 6-32 for value and type) | | |
| 5C410 | CAPACITOR, 1000 Pf ±2%, 100V | * | 600 |
| 5CR101 and 5CR102 | DIODE | * | 639 |
| 5FL101 | FILTER | EMR | 3898 |
| 5Q101 | TRANSISTOR (2N2501) | * | 801 |
| 5Q102 | TRANSISTOR (2N708) | * | 671 |
| 5Q103 | TRANSISTOR (MM998) | * | 805-2 |
| 5Q403, and 5Q404 | TRANSISTOR (2N404) | * | 649 |
| 5R101, 5R102, and 5R107 | RESISTOR, 100Ω ±5%, 1/4W | Allen Bradley | RC07GF101J |
| 5R103 and 5R108 | RESISTOR, 10Ω ±5%, 1/4W | Allen Bradley | RC07GF100J |
| 5R104 and 5R105 | RESISTOR, 33Ω ±5%, 1/4W | Allen Bradley | RC07GF330J |
| 5R106 | RESISTOR, 4.7K ±5%, 1/4W | Allen Bradley | RC07GF472J |
| 5R206 | RESISTOR, 8.2K ±5%, 1/4W | Allen Bradley | RC07GF822J |
| 5R410 | RESISTOR, 6.8K ±5%, 1/4W | Allen Bradley | RC07GF682J |
| 5R411 | RESISTOR, Selected in test ±5%, 1/4W | Allen Bradley | RC07GF(X)J |
| 5R412 | RESISTOR, Selected in test ±1%, 1/8W | * | 625 |
| 5R417 | RESISTOR, 2.15K ±1%, 1/8W | * | 625 |
| 5R418 | RESISTOR, 6.81K ±1%, 1/8W | * | 625 |
| 5R420 | RESISTOR, 6.04K ±1%, 1/8W | * | 625 |
| 5R422, and 5R423 | RESISTOR, 2.43K ±1%, 1/8W | * | 625 |
| 5R424 | RESISTOR, 4.64K ±1%, 1/8W | * | 625 |
| 5R425 | RESISTOR, 47Ω ±5%, 1/4W | Allen Bradley | RC07GF470J |
| 5R426, and 5R427 | RESISTOR, 14.0K ±1%, 1/8W | * | 625 |
| | PRINTED WIRING BOARD | EMR | 4672 |
| | TRANSIPAD | * | 800-7 |
| | TRANSIPAD | * | 800-1 |

* Refer to Approved Vendor's List, Table 6-45.

## Table 6-16. Model 210C Output Filter Assemblies (Ref. Figure 5-39)

| CIRCUIT SYMBOL NO. | DESCRIPTION | MANUFACTURER | |
|---|---|---|---|
| | | NAME | PART NO. |
| | MODELS 210C-01, 210C-06 AND 210C-07 OUTPUT FILTER ASSEMBLIES | EMR | 210-0310 |
| | MODELS 210C-02, 210C-04, 210C-05, 210C-08 AND 210C-09 OUTPUT FILTER ASSEMBLIES | EMR | 210-0320 |
| | MODEL 210C-03 OUTPUT FILTER ASSEMBLY | EMR | 210-0330 |
| | FRONT PANEL ASSEMBLY (Used on Models 210C-01, 210C-06 and 210C-07) | EMR | 210-0312 |
| 6R605 | POTENTIOMETER, 50K ±10%, (Used on Model 210C-06) | Bourns or equiv. | 200L-1 |
| 6R605 | POTENTIOMETER (Used on Model 210C-07 only; see Table 6-33 for value and type) | | |
| 6SW601 | SWITCH, Toggle (Used on Model 210C-01) | Control Switch | T2150 |
| | FRONT PANEL ASSEMBLY (Used on Models 210C-02, 210C-03, 210C-04, 210C-05, 210C-08, and 210C-09) | EMR | 210-1321 |
| | FRONT PANEL ASSEMBLY (Used on Models 210C-11 and 210C-21) | EMR | 3674 |
| S1 | SWITCH, rotary (Model 210C-11) | Oak | 250691-513 |
| S1 | SWITCH, rotary (Model 210C-21) | Oak | 252058-512 |
| | PRINTED-CIRCUIT CARD ASSEMBLY (Used on Models 210C-01, 210C-02, and 210C-03; see Table 6-17 for breakdown) | EMR | 210-0300 |
| | PRINTED-CIRCUIT CARD ASSEMBLY (Used on Models 210C-04 and 210C-05; see Table 6-18 for breakdown) | EMR | 210-0341 |
| | PRINTED-CIRCUIT CARD ASSEMBLY (Used on Model 210C-06; see Table 6-19 for breakdown) | EMR | 210-0361 |
| | PRINTED-CIRCUIT CARD ASSEMBLY (Used on Model 210C-07; see Table 6-20 for breakdown) | EMR | 1005 |
| | PRINTED-CIRCUIT CARD ASSEMBLY (Used on Model 210C-08; see Table 6-21 for breakdown) | EMR | 3889 |
| | PRINTED-CIRCUIT CARD ASSEMBLY (Used on Model 210C-09; see Table 6-22 for breakdown) | EMR | 3893 |

Table 6-16 (Cont'd.). Model 210C Output Filter Assemblies
(Ref. Figure 5-39)

| CIRCUIT SYMBOL NO. | DESCRIPTION | MANUFACTURER | |
|---|---|---|---|
| | | NAME | PART NO. |
| | PRINTED-CIRCUIT CARD ASSEMBLY (Used on Model 210C-11; see Table 6-23 for breakdown) | EMR | 3842 |
| | PRINTED-CIRCUIT CARD ASSEMBLY (Used on Model 210C-21; see Table 6-24 for breakdown) | EMR | 3955 |

Table 6-17. Models 210C-01, 210C-02, and 210C-03 Printed-Circuit-Card Assemblies (Ref. Figure 5-40)

| CIRCUIT SYMBOL NO. | DESCRIPTION | MANUFACTURER | |
|---|---|---|---|
| | | NAME | PART NO. |
| | PRINTED-CIRCUIT CARD ASSEMBLY (Used on Models 210C-01, 210C-02, and 210C-03) | EMR | 210-0300 |
| 6C601 | CAPACITOR (See Table 6-33 for value and type) | | |
| 6C602 | CAPACITOR (See Table 6-33 for value and type) | | |
| 6C603 | CAPACITOR (See Table 6-33 for value) | | |
| 6R601 | RESISTOR, ±1% (See Table 6-33 for value and type) | IRC or equiv. | MEA-T0 |
| 6R602 | RESISTOR, ±1%, (See Table 6-33 for value and type) | IRC or equiv. | MEA-T0 |
| 6R603 | RESISTOR, ±1% (See Table 6-33 for value and type) | IRC or equiv. | MEA-T0 |
| 6R604 | RESISTOR, ±1% (See Table 6-33 for value and type) | IRC or equiv. | MEA-T0 |
| 6R605 | RESISTOR, ±1% (See Table 6-33 for value and type) | IRC or equiv. | MEA-T0 |
| | PRINTED-CIRCUIT CARD | EMR | 210-1310-1 |

Table 6-18. Models 210C-04 and 210C-05 Printed-Circuit-Card Assemblies (Ref. Figure 5-44)

| CIRCUIT SYMBOL NO. | DESCRIPTION | MANUFACTURER | |
|---|---|---|---|
| | | NAME | PART NO. |
| | PRINTED-CIRCUIT CARD ASSEMBLY (Used on Models 210C-04 and 210C-05) | EMR | 210-0341 |
| 6C604 | CAPACITOR, 560Pf ±2%, 300V | Arco or equiv. | DM15-561G |
| 6FL101 | FILTER (Used on Model 210C-04; value and type determined by customer ordering information) | EMR | 840-0005 |
| 6FL101 | FILTER (Used on Model 210C-05; value and type determined by customer ordering information) | EMR | 840-0006 |
| 6R606 and 6R609 | RESISTOR, 4.99K ±1%, 1/8W | IRC or equiv. | MEA-TO |
| 6R607 | RESISTOR, ±5%, 1/4W (Value to be 1/3 DC resistance of 6 FL101; use closest ±5% value) | Allen Bradley or equiv. | CB |
| 6R608 | RESISTOR, ±1%, 1/8W (See Table 6-33 for value) | IRC or equiv. | MEA-TO |
| | PRINTED-CIRCUIT CARD | EMR | 210-1342 |

Table 6-19. Model 210C-06 Printed-Circuit-Card Assembly
(Ref. Figure 5-46)

| CIRCUIT SYMBOL NO. | DESCRIPTION | MANUFACTURER | |
|---|---|---|---|
| | | NAME | PART NO. |
| | PRINTED-CIRCUIT CARD ASSEMBLY (Used on Model 210C-06) | EMR | 210-0361 |
| 6C601 | CAPACITOR (Value determined by customer ordering information) | | |
| 6C602 | CAPACITOR (Value determined by customer ordering information) | | |
| 6C603 | CAPACITOR (Value determined by customer ordering information) | | |
| 6C604 | CAPACITOR (Value determined by customer ordering information) | | |
| 6R601 | RESISTOR, 20.0K ±1%, 1/8W | IRC or equiv. | MEA-TO |
| 6R602 | RESISTOR, 80.6K ±1%, 1/8W | IRC or equiv. | MEA-TO |
| 6R603 | RESISTOR, 100.0K ±1%, 1/8W | IRC or equiv | MEA-TO |
| 6R604 | RESISTOR, 150.0K ±1%, 1/8W | IRC or equiv. | MEA-TO |
| 6R606 | RESISTOR, 124.0K ±1%, 1/8W | IRC or equiv. | MEA-TO |
| | PRINTED-CIRCUIT CARD | EMR | 210-1361 |

Table 6-20. Model 210C-07 Printed-Circuit-Card Assembly
(Ref. Figure 5-48)

| CIRCUIT SYMBOL NO. | DESCRIPTION | MANUFACTURER | |
|---|---|---|---|
| | | NAME | PART NO. |
| | PRINTED-CIRCUIT CARD ASSEMBLY (Used on Model 210C-07) | EMR | 1005 |
| 6C602 | CAPACITOR (See Table 6-35 for value and type) | | |
| 6C603 | CAPACITOR (See Table 6-35 for value and type) | | |
| 6C604 | CAPACITOR (See Table 6-35 for value and type) | | |
| 6R602 | RESISTOR, ±1%, 1/8W (See Table 6-35 for value and type) | IRC or equiv. | MEA-TO |
| 6R603 | RESISTOR, ±1%, 1/8W (See Table 6-35 for value and type) | IRC or equiv. | MEA-TO |
| 6R604 | RESISTOR, ±1%, 1/8W (See Table 6-35 for value and type) | IRC or equiv. | MEA-TO |
| 6R606 | RESISTOR, ±1%, 1/8W (See Table 6-35 for value and type) | IRC or equiv. | MEA-TO |
| | PRINTED-CIRCUIT CARD | EMR | 210-1361 |

Table 6-21. Model 210C-08 Printed-Circuit-Card Assembly
(Ref. Figure 5-50)

| CIRCUIT SYMBOL NO. | DESCRIPTION | MANUFACTURER | |
|---|---|---|---|
| | | NAME | PART NO. |
| | PRINTED-CIRCUIT CARD ASSEMBLY (Used on Model 210B-08) | EMR | 3889 |
| 6C601 thru 6C606 | CAPACITOR, (See Table 6-37 for value and type) | | |
| 6R601 thru 6R614 | RESISTOR (See Table 6-37 for value and type) | | |
| | PRINTED WIRING BOARD | EMR | 3887 |

Table 6-22. Model 210B-09 Printed-Circuit-Card Assembly
(Ref. Figure 5-52)

| CIRCUIT SYMBOL NO. | DESCRIPTION | MANUFACTURER | |
|---|---|---|---|
| | | NAME | PART NO. |
| | PRINTED-CIRCUIT CARD ASSEMBLY (Used on Model 210B-09) | EMR | 3893 |
| 6C601 thru 6C605 | CAPACITOR (See Table 6-38 for value and type) | | |
| 6R601 thru 6R611 | RESISTOR (See Table 6-38 for value and type) | | |
| | PRINTED CIRCUIT CARD | EMR | 3892 |

Table 6-23. Model 210C-11 Printed-Circuit-Card Assembly
(Ref. Figure 5-54)

| CIRCUIT SYMBOL NO. | DESCRIPTION | MANUFACTURER | |
|---|---|---|---|
| | | NAME | PART NO. |
| | PRINTED-CIRCUIT CARD ASSEMBLY (Used on the Model 210C-11) | EMR | 3842 |
| 6C601A | CAPACITOR, 0.0425 µf ±1%, 200V | Electro-Cube | 210D1C |
| 6C601B | CAPACITOR, 0.0212 µf ±1%, 200V | Electro-Cube | 210D1C |
| 6C601C | CAPACITOR, 0.106 µf ±1%, 200V | Electro-Cube | 210D1C |
| 6C601D | CAPACITOR, 5300 Pf ±1%, 200V | Electro-Cube | 210D1C |
| 6C601E | CAPACITOR, 2660 Pf ±1%, 200V | Electro-Cube | 210D1C |
| 6C601F | CAPACITOR, 1330 Pf ±1%, 200V | Electro-Cube | 210D1C |
| 6C602A | CAPACITOR, 0.027 µf ±1%, 200V | Electro-Cube | 210D1C |
| 6C602B | CAPACITOR, 0.0135 µf ±1%, 200V | Electro-Cube | 210D1C |
| 6C602C | CAPACITOR, 6740 Pf ±1%, 200V | Electro-Cube | 210D1C |
| 6C602D | CAPACITOR, 3390 Pf ±1%, 200V | Electro-Cube | 210D1C |
| 6C602E | CAPACITOR, 1680 Pf ±1%, 200V | Electro-Cube | 210D1C |
| 6C602F | CAPACITOR, 845 Pf ±1%, 500V | * | 600 |
| 6C603A | CAPACITOR, 6620 Pf ±1%, 200V | Electro-Cube | 210D1C |
| 6C603B | CAPACITOR, 3300 Pf ±1%, 200V | Electro-Cube | 210D1C |
| 6C603C | CAPACITOR, 1650 Pf ±1%, 200V | Electro-Cube | 210D1C |
| 6C603D | CAPACITOR, 827 Pf ±1%, 500V | * | 600 |
| 6C603E | CAPACITOR, 410 Pf ±1%, 500V | * | 600 |
| 6C603F | CAPACITOR, 206 Pf ±1%, 500V | * | 600 |
| 6R601 | RESISTOR, 20K ±1%, 1/8W | * | 625 |
| 6R602 thru 6R603 | RESISTOR, 10K ±1%, 1/8W | * | 625 |

Table 6-24. Model 210C-21 Printed-Wiring-Board Assembly
(Ref. Figure 5-56)

| CIRCUIT SYMBOL NO. | DESCRIPTION | MANUFACTURER | |
|---|---|---|---|
| | | NAME | PART NO. |
| | PRINTED-CIRCUIT CARD ASSEMBLY (Used on Model 210C-21) | EMR | |
| 6C601A, 6C601B, 6C602A, B, 6C603A, and 6C603B | CAPACITOR, (See Table 6-39 for value and type) | | |
| 6R601 thru 6R605 | RESISTOR (See Table 6-39 for value and type) | | |

## Table 6-25. Model 210T Reference Channel Selector Assembly (Ref. Figure 5-58)

| CIRCUIT SYMBOL NO. | DESCRIPTION | MANUFACTURER | |
|---|---|---|---|
| | | NAME | PART NO. |
| | MODEL 210T REFERENCE CHANNEL SELECTOR ASSEMBLY | EMR | 210-0440 |
| | FRONT PANEL ASSEMBLY Upper (Used on Models 210T-01, 210T-03, 210T-06, 210T-07, and 210T-08) | EMR | 210-0442-1 |
| 5R421 | POTENTIOMETER, Multi-turn 2.5K (Used on units with deviation of less than 10%) | EMR | 945-0018 |
| 5R421 | POTENTIOMETER, Multi-turn 4.0K (Used on units with deviation greater than 10%) | EMR | 945-0019 |
| | FRONT PANEL ASSEMBLY, Lower (Used on all Model 210T's) | EMR | 210-0441-1 |
| 5R654 | POTENTIOMETER, 200 ohm | Bourns | 260L-1-201 |
| 5R655 | POTENTIOMETER, 1K | Bourns | 260L-1-152 |
| 5SW601 | SWITCH, Toggle | Control Switch | T2150 |
| | FRONT PANEL ASSEMBLY, Upper (Used on Model 210T-02) | EMR | 210-0442-3 |
| 5R421 | POTENTIOMETER, Multi-turn, 2.5K | EMR | 945-0018 |
| | CHANNEL SELECTOR PRINTED-CIRCUIT CARD ASSEMBLY (Used on Models 210T-01, 210T-02, and 210T-03; see Table 6-26 for breakdown) | EMR | 210-0444 |
| | CHANNEL SELECTOR PRINTED-CIRCUIT CARD ASSEMBLY (Used on Models 210T-06, 210T-07, and 210T-08; see Table 6-27 for breakdown) | EMR | 5990 |
| | OUTPUT FILTER PRINTED-CIRCUIT CARD ASSEMBLY (Used on Models 210T-01, 210T-03, 210T-06, and 210T-08; see Table 6-28 for breakdown) | EMR | 210-0443 |
| | OUTPUT FILTER PRINTED-CIRCUIT CARD ASSEMBLY (Used on Models 210T-02 and 210T-07; see Table 6-29 for breakdown) | EMR | 3107 |

Table 6-26. Models 210T-01, 210T-02, and 210T-03 Channel Selector Printed-Circuit-Card Assembly (Ref. Figure 5-59)

| CIRCUIT SYMBOL NO. | DESCRIPTION | MANUFACTURER | |
|---|---|---|---|
| | | NAME | PART NO. |
| | CHANNEL SELECTOR PRINTED-CIRCUIT CARD ASSEMBLY (Used on Models 210T-01 210T-02, and 210T-03) | EMR | 210-0444 |
| 5CR101 | DIODE | * | 639 |
| 5C101 and 5C107 | CAPACITOR, 3.3 µf ±20%, 15V | * | 601 |
| 5C115, 5C203, 5C204, 5C411 and 5C412 | CAPACITOR (See Table 6-40 for Model 210T-01 component values and types; see Table 6-42 for Model 210T-02 component values and types; see Table 6-44 for Model 210T-03 component values and types) | | |
| 5FL101 | FILTER (See Table 6-40 for Model 210T-01 component value and type; see Table 6-42 for Model 210T-02 component value and type; see Table 6-44 for Model 210T-03 component value and type) | EMR | 840-0019 |
| 5Q101 and 5Q102 | TRANSISTOR | * | 649 |
| 5Q103 | TRANSISTOR | Texas Inst. | 2N1304 |
| 5R101, 5R116 and 5R117 | RESISTOR, 6.8K ±5%, 1/4W | Allen Bradley | CB6825 |
| 5R102 and 5R125 | RESISTOR, 220 ohm ±5%, 1/4W | Allen Bradley | CB2215 |
| 5R108 and 5R118 | RESISTOR, 47 ohm ±5%, 1/4W | Allen Bradley | CB4705 |
| 5R136 | RESISTOR (See Table 6-40 for Model 210T-01 component value and type; see Table 6-42 for Model 210T-02 component value and type; see Table 6-44 for Model 210T-03 component val ue and type) | | |
| 5R206 | RESISTOR, 8.2K ±5%, 1/4W | Allen Bradley | CB8225 |
| 5R420 | RESISTOR (Used on Model 210T-01 see Table 6-40 for component value and type) | | |
| 5R420 | RESISTOR, 3.01K ±1%, 1/8W (Used on Model 210T-02 and Model 210T-03) | * | 625 |
| 5R422 | RESISTOR (Used on Model 210T-01; see Table 6-40 for component value and type) | | |
| 5R422 | RESISTOR, 4.22K ±1%, 1/8W (Used on Model 210T-02 and 210T-03) | * | 625 |
| 5R426 and 5R427 | RESISTOR, 14K ±1%, 1/8W | * | 625 |
| | TRANSIPAD | Milton Ross or equiv. | A10028 |
| | PRINTED-CIRCUIT CARD | EMR | 210-1203-1 |

## Table 6-27. Models 210T-06, 210T-07, and 210T-08 Channel Selectors Printed-Circuit-Card Assembly (Ref. Figure 5-60)

| CIRCUIT SYMBOL NO. | DESCRIPTION | MANUFACTURER | |
|---|---|---|---|
| | | NAME | PART NO. |
| | CHANNEL SELECTOR PRINTED-CIRCUIT CARD ASSEMBLY (Used on Models 210T-06, 210T-07, and 210T-08) | EMR | 5990 |
| 5A101 | PRINTED WIRING MODULE ASSEMBLY (See Table 6-12 for breakdown) | EMR | 6365 |
| 5A102 | PRINTED WIRING MODULE ASSEMBLY (See Table 6-11 for breakdown) | EMR | 5397 |
| 5C101 | CAPACITOR, 0.11 µf ±10%, 100V | Sprague | |
| 5C102, 5C103, 5C105 and 5C106 | CAPACITOR, 0.1 µf ±20%, 35V | * | 601 |
| 5C104 | CAPACITOR, Test variable, 3 to 15 Pf ±10%, 500V | * | 600 |
| 5C203 thru 5C205 5C411 and 5C412 | CAPACITOR, (See Table 6-40 for Model 210T-06 component values and types, see Table 6-42 for Model 210T-07 component values and types; see Table 6-44 for Model 210T-08 component values and types) | | |
| 5CR101 and 5CR102 | DIODE | * | 814 |
| 5FL101 | FILTER (Used on Model 210T-06) | EMR | 3529-4 |
| 5FL101 | FILTER (Used on Model 210T-07) | EMR | 840-0019 |
| 5FL101 | FILTER (Used on Model 210T-08) | EMR | 854 |
| 5R101, 5R103 and 5R105 | RESISTOR, 100 ohms ±5%, 1/4W | | RC07GF101J |
| 5R106 and 5R107 | RESISTOR, 10 ohm ±5%, 1/4W | | RC07GF100J |
| 5R206 | RESISTOR, 8.2K ±5%, 1/4W | | RC07GF822J |
| 5R420 and 5R422 | RESISTOR, (See Table 6-30 for component value and type) | | |
| 5R426 and 5R427 | RESISTOR, 14.0K ±1%, 1/8W | * | 625 |

Table 6-28. Models 210T-01, 210T-03, 210T-06, and 210T-08 Output Filters Printed-Circuit-Card Assembly (Ref. Figure 5-61)

| CIRCUIT SYMBOL NO. | DESCRIPTION | MANUFACTURER | |
|---|---|---|---|
| | | NAME | PART NO. |
| | OUTPUT FILTER PRINTED-CIRCUIT-CARD ASSEMBLY (Used on Models 210T-01, 210T-03, 210T-06, and 210T-08) | EMR | 210-0443 |
| 5C601 | CAPACITOR (See note, below) | | |
| 5C602 | CAPACITOR (See note, below) | | |
| 5C603 | CAPACITOR (See note, below) | | |
| 5R601 and 5R602 | RESISTOR, 13.3K ±1%, 1/4W | IRC | MEA-TO |
| 5R604 | RESISTOR, 8.25K ±1%, 1/4W | IRC | MEA-TO |
| 5R605 | RESISTOR, 9.09K ±1%, 1/4W | IRC | MEA-TO |
| 5R656 | RESISTOR, 1.27K ±1%, 1/4W | IRC | MEA-TO |
| | PRINTED-CIRCUIT CARD | EMR | 210-1441-1 |
| | NOTE<br>See Table 6-40 for Models 210T-01 and 210T-06 component value and type.<br><br>See Table 6-44 for Models 210T-03 and 210T-08 component value and type. | | |

## Table 6-29. Models 210T-02 and 210T-07 Output Filters Printed-Circuit-Card Assembly (Ref. Figure 5-62)

| CIRCUIT SYMBOL NO. | DESCRIPTION | MANUFACTURER | |
|---|---|---|---|
| | | NAME | PART NO. |
| | OUTPUT FILTER PRINTED-CIRCUIT-CARD ASSEMBLY (Used on Models 210T-02 and 210T-07) | EMR | 3107 |
| 5C601 | CAPACITOR (See Table 6-42 for value and type) | | |
| 5C602 | CAPACITOR (See Table 6-42 for value and type) | | |
| 5C603 | CAPACITOR (See Table 6-42 for value and type) | | |
| 5R601 and 5R602 | RESISTOR, 15K ±1%, 1/8W | * | 625 |
| 5R604 | RESISTOR, 9.09K ±1%, 1/8W | * | 625 |
| 5R656 | RESISTOR, 1.27K ±1%, 1/8W | * | 625 |
| | PRINTED-CIRCUIT CARD | EMR | 3108 |

*Refer to Approved Vendors List, Table 6-45.

## Table 6-30. Component Value Formulas, Models 210B-01, 210B-02, 210B-05, 210B-06, and 210B-07 Channel Selectors

| COMPONENT | FORMULAS | |
|---|---|---|
| 5C203 | $\frac{6.75}{F_cD}$ µf | |
| 5C204 | $\frac{67.6}{F_cD}$ µf | (When $F_cD$ less than 220CPS) |
| 5C204 | $\frac{33.8}{F_cD}$ µf | (When $F_cD$ greater than 220CPS) |
| 5C205 | $\frac{67.6}{F_cD}$ µf | |
| 5C208 | $\frac{5380}{F_cD}$ µf | (When $F_cD$ less than 7 Kc) |
| 5C208 | $\frac{2690}{F_cD}$ µf | (When $F_cD$ greater than 7 Kc) |
| 5C209 | $\frac{5380}{F_cD}$ µf | |
| 5C407 | $\frac{76}{F_cD}$ µf | (When $F_cD$ less than 80CPS) |
| 5C407 | $\frac{38}{F_cD}$ µf | (When $F_cD$ greater than 80CPS) |
| 5C408 | $\frac{76}{F_cD}$ µf | |
| 5C409 | $\frac{6.1}{F_cD}$ µf | |
| 5C411 and 5C412 | $\frac{100}{F_c}$ µf | |
| 5R420 | $\frac{0.3145}{0.1797\text{-}D}$ | K ohm (When deviation equal to or less than 10%) |
| 5R420 | $\frac{0.1797}{0.1797\text{-}D}$ | K ohm (When deviation greater than 10%) |
| 5R421 | 2.5K ohm | (When deviation equal to or less than 10%) |
| 5R421 | 4.0K ohm | (When deviation greater than 10%) |

## Table 6-30 (Cont'd.). Component Value Formulas, Models 210B-01, 210B-02, 210B-05, 210B-06, and 210B-07 Channel Selectors

| COMPONENT | FORMULAS | |
|---|---|---|
| 5R422 | $\frac{0.3145}{D}$ | K ohm (When deviation equal to or less than 10%) |
| 5R422 | $\frac{0.1797}{D}$ | K ohm (When deviation greater than 10%) |
| 5C107 (Note 6) | $\frac{400}{F_c\ (Kc)}$ | Pf |

NOTES:

1. $F_c$ - Subcarrier center frequency in CPS.
2. D - Deviation from band center to bandedge, as a decimal fraction.
3. Calculate value from formula, select type from component type table (see Table 6-31).

   Capacitors:
   A. 5C411 and 5C412 nearest 1% values.
   B. Sprague 150D nearest 5% values.
   C. All others nearest 2% values.

   Resistors: Nearest 1% values
4. See Table 6-31 for 5C115, 5L101 and 5R136.
5. Alternate types for Dearborn XIP capacitors:

   A. Arco MT
   B. Sprague 127P
6. Used when frequency is 10 Kc or lower.

## Table 6-31. Component Types, Models 210B-01, 210B-02, 210B-05, and 210B-06 Channel Selectors

| COMPONENT | VALUE RANGE | MANUFACTURER & TYPE |
|---|---|---|
| 5C115 | Use 1000 Pf for units up to 3 Kc | Arco DM15, 100V |
| | Use 470 Pf for units from 3 Kc to 22 Kc | Arco DM15, 300V |
| | Use 47 Pf for units from 22 Kc to 100 Kc | Arco DM15, 500V |
| 5C203 | 3.9 µf to 6.2 µf | Dearborn MP1P, ±2%, 100V |
| | 0.15 µf to 0.22 µf | Dearborn MP1P, ±2%, 200V |
| | 0.005 µf to 0.15 µf | Dearborn X1P, ±2%, 200V |
| | 100 Pf to 5000 Pf | Arco DM19, ±2% |
| 5C204 | 1.1µf to 6.2 µf | Sprague 150D, ±5%, 20V |
| | 0.33µf to 1.0µf | Sprague 150D, ±5%, 35V |
| | 0.005µf to 0.15µf | Dearborn XIP, ±2%, 200V |
| | 100 Pf to 5000 Pf | Arco DM19, ±2% |
| 5C205 | 1.1µf to 6.2 µf | Sprague 150D, ±5%, 20V |
| | 0.33µf to 1.0µf | Sprague 150D, ±5%, 35V |
| 5C208 | 130µf to 200µf | Sprague 150D, ±5%, 10V |
| | 41µf to 120µf | Sprague 150D, ±5%, 10V |
| | 5.1µf to 39µf | Sprague 150D, ±5%, 10V |
| | 1.1µf to 4.7µf | Sprague 150D, ±5%, 35V |
| | 0.05µf to 0.39µf | Dearborn MPIP, ±2%, 200V |
| 5C209 | 130µf to 200µf | Sprague 150D, ±5%, 10V |
| | 41µf to 120µf | Sprague 150D, ±5%, 10V |
| | 5.1µf to 39µf | Sprague 150D, ±5%, 10V |
| | 1.1µf to 4.7µf | Sprague 150D, ±5%, 35V |
| 5C407 | 2.3µf to 7.5 µf | Sprague 150D, ±5%, 20V |
| | 1.0µf to 2.2µf | Sprague 150D, ±5%, 20V |
| | 0.15µf to 0.4µf | Dearborn MPIP, ±2%, 200V |
| | 0.005µf to 0.15µf | Dearborn XIP, ±2%, 200V |
| | 800 Pf to 5000 Pf | Arco DM19, ±2% |
| 5C408 | 0.34 µf to 2.2 µf | Sprague 150D, ±5%, 20V |
| 5C409 | 0.1µf to 0.58µf | Dearborn MPIP, ±2%, 200V |
| | 0.005µf to 0.1µf | Dearborn XIP, ±2%, 200V |
| | 100 Pf to 5000 Pf | Arco DM19, ±2% |
| 5C411 and 5C412 | 0.417 µf to 0.714 µf | Dearborn LP, ±1%, 100V |
| | 0.02 µf to 0.25 µf | Arco NT or Dearborn DAIP, ±2%, 200V |
| | 5000 Pf to 20,000 Pf | Arco DM30, ±2% |
| | 100 Pf to 5000 Pf | Arco DM19, ±2% |
| 5L101 | Use 1 millihenry for units below 22 Kc | Delevan 2500 |
| | Use 500µH for units from 22 Kc to 100 Kc | Delevan 2500 |
| 5R136 | Use 2.7K for units below 22 Kc | Allen Bradley CB, ±5% |
| | Use 1K for units from 22 Kc to 100 Kc | Allen Bradley CB, ±5% |

Table 6-32. Component Value Formulas and Types, Model 210B-21 Channel-Selector Assembly

| COMPONENT | FORMULA | TYPE |
|---|---|---|
| 5C203 | $\frac{45.0}{F_c}$ µf | A |
| 5C204 | $\frac{90.0}{F_c}$ µf | A or B |
| 5C205 | $\frac{225.3}{F_c}$ µf | A or B |
| 5C206 | $\frac{450.6}{F_c}$ µf | A or B |
| 5C407 | $\frac{253.3}{F_c}$ µf | A or B |
| 5C408 | $\frac{506.6}{F_c}$ µf | A or B |
| 5C409 | $\frac{40.6}{F_c}$ µf | A |
| 5C411 and 5C412 | $\frac{100}{F_c}$ | A |

NOTES:

$F_c$ = Subcarrier center frequency in CPS.

Type A = ARCO DM19 ±1%.

Type B = Dearborn X1P ±2%, 200V.

Table 6-33. Component Value Formulas, Models 210C-01, 210C-02 and 210C-03 Output Filters

| COMPONENT | FORMULAS | | | | |
|---|---|---|---|---|---|
| | 1CPS to 8CPS | 8CPS to 80CPS | 80CPS to 800CPS | 800CPS to 4 Kc | Above 4 Kc |
| 6C601 | $\frac{1.69}{FM}$ µf | 0.212µf | 0.0212µf | 4220 Pf | $\frac{16.9}{FM}$ µf |
| 6C602 | $\frac{2.65}{FM}$ µf | 0.330µf | 0.0330µf | 6680 Pf | $\frac{26.5}{FM}$ µf |
| 6C603 | $\frac{0.412}{FM}$ µf | 0.0510µf | 5100 Pf | 1020 Pf | $\frac{4.12}{FM}$ µf |
| 6R601 | 150K | $\frac{1200}{FM}$ K | $\frac{12,000}{FM}$ K | $\frac{60,000}{FM}$ K | 15K |
| 6R602 | 49.9K | $\frac{400}{FM}$ K | $\frac{4000}{FM}$ K | $\frac{20,000}{FM}$ K | 4.99K |
| 6R603 | 100K | $\frac{800}{FM}$ K | $\frac{8000}{FM}$ K | $\frac{40,000}{FM}$ K | 10K |
| 6R604 | 100K | $\frac{800}{FM}$ K | $\frac{8000}{FM}$ K | $\frac{40,000}{FM}$ K | 10K |
| 6R605 | 100K | $\frac{800}{FM}$ K | $\frac{8000}{FM}$ K | $\frac{40,000}{FM}$ K | 10K |

NOTES:

1. FM - Output filter cutoff frequency (CPS).
2. Calculate value from formula, select type from component type table (see Table 6-34).

   Capacitors: Nearest 1% value.

   Resistors: Nearest 1% values.
3. 6R601 through 6R605 are MEA-TO, ±1%, IRC or equivalent.

Table 6-34. Component Types, Models 210C-01, 210C-02, and 210C-03 Output Filters

| COMPONENT | VALUE RANGE | MANUFACTURER & TYPE |
|---|---|---|
| 6C601 | 0.3μf to 1.7μf | Dearborn MPIP, ±2%, 100V |
| | 0.022μf to 0.3μf | Dearborn XIP, ±2%, 200V |
| | 1500 Pf to 4300 Pf | Arco DM19, ±2% |
| 6C602 | 0.45μf to 2.7μf | Dearborn MPIP, ±2%, 100V |
| | 0.033μf to 0.45μf | Dearborn XIP, ±2%, 200V |
| | 5200 Pf to 6700 Pf | Arco DM30, ±2% |
| | 2700 Pf to 5100 Pf | Arco DM19, ±2% |
| 6C603 | 0.15μf to 0.4μf | Dearborn MPIP, ±2%, 200V |
| | 5200 Pf to 0.15μf | Dearborn XIP, ±2%, 200V |
| | 400 Pf to 5100 Pf | Arco DM19, ±2% |

Table 6-35. Component Value Formulas, Model 210C-07
Output Filter

| COMPONENT | FORMULAS | | |
|---|---|---|---|
| | 1CPS TO 80CPS | 80CPS TO 800CPS | 800CPS TO 16 Kc |
| 6C602 | $\frac{3.465}{\text{FM CPS}}$ µf | $\frac{7.095}{\text{FM CPS}}$ µf | $\frac{21.12}{\text{FM CPS}}$ µf |
| 6C603 | $\frac{2.221}{\text{FM CPS}}$ µf | $\frac{4.558}{\text{FM CPS}}$ µf | $\frac{13.57}{\text{FM CPS}}$ µf |
| 6C604 | $\frac{0.5355}{\text{FM CPS}}$ µf | $\frac{1.097}{\text{FM CPS}}$ µf | $\frac{3.264}{\text{FM CPS}}$ µf |
| 6R602 | 150K ±1% | 75K ±1% | 24.9K ±1% |
| 6R603 | 75K ±1% | 37.4K ±1% | 12.4K ±1% |
| 6R604 | 75K ±1% | 37.4K ±1% | 12.4K ±1% |
| 6R605 | 20K ±10% | 10K ±10% | 5K ±10% |
| 6R606 | 64.9K ±1% | 32.4K ±1% | 10.5K ±1% |

NOTES:

1. FM - Output filter cutoff frequency in CPS.
2. Calculate value from formula, select type from component type table (see Table 6-36).

Table 6-36. Component Types, Model 210C-07 Output Filter

| COMPONENT | VALUE RANGE | MANUFACTURER & TYPE |
|---|---|---|
| 6C602 | 0.3μf to 1.7μf | Dearborn MPIP, ±2%, 100V |
| | 5200 Pf to 0.3μf | Dearborn XIP, ±2%, 200V |
| | 1500 Pf to 4300 Pf | Arco DM19, ±2% |
| 6C603 | 0.15μf to 0.4μf | Dearborn MPIP, ±2%, 200V |
| | 5200 Pf to 0.15μf | Dearborn XIP, ±2%, 200V |
| | 1500 Pf to 4300 Pf | Arco DM19, ±2% |
| 6C604 | 5200 Pf to 0.3μf | Dearborn XIP, ±2%, 200V |
| | 1500 Pf to 4300 Pf | Arco DM19, ±2% |

Table 6-37. Component Values and Types, Model 210C-08 Output Filter Assembly

| Freq. CPS | 6C601 µf | 6C602 6C603 6C604 µf | 6C605 µf | 6C606 µf | 6R601 K | 6R602 K | 6R603 6R604 6R605 K | 6R606 K | 6R607 K | 6R608 K | 6R609 K | 6R610 K | 6R611 K | 6R612 K | 6R613 K | 6R614 K |
|---|---|---|---|---|---|---|---|---|---|---|---|---|---|---|---|---|
| 59 | 4.0 | 1.88 | 0.362 | 0.0075 | 0.931 | 2.67 | 3.83 | 4.12 | 4.87 | 7.15 | 10.5 | 33.2 | 71.5 | Open | 113 | 45.3 |
| 110 | 1.06 | 0.5 | 0.096 | 0.002 | 1.91 | 5.36 | 7.87 | 8.25 | 10.0 | 14.3 | 21.5 | 68.1 | 147.0 | Open | 226 | 93.1 |
| 160 | 0.72 | 0.34 | 0.065 | 0.00136 | 1.91 | 5.36 | 7.87 | 8.25 | 10.0 | 14.3 | 21.5 | 68.1 | 147.0 | Open | 226 | 93.1 |

Notes:

1. All resistors are MEA Type 1%, 1/8W.
2. 6C601, 6C602, 6C603, and 6C604 are Electro-Cube 210B1A 2%, 50V. All other capacitors are Electro-Cube 212 A1B 2%, 100V.

Table 6-38. Component Values and Types, Model 210C-09 Output Filter Assembly

| Center Freq. Fc, CPS | 6C601 6C602 6C603 µf | 6C604 µf | 6C605 µf | 6R601 K | 6R602 6R603 6R604 K | 6R605 K | 6R606 K | 6R607 K | 6R608 K | 6R609 K | 6R610 K | 6R611 K |
|---|---|---|---|---|---|---|---|---|---|---|---|---|
| 59 | 2.0 | 0.61 | 0.0117 | 3.92 | 5.23 | 4.64 | 7.87 | 11.8 | 42.2 | 76.8 | 9.53 | 54.9 |
| 5 | 2.0 | 0.61 | 0.0117 | 46.4 | 61.9 | 54.9 | 93.1 | 140.0 | 499.0 | 909.0 | 113.0 | 649.0 |

Notes:

1. All capacitors are: Electro-Cube 212A1B, 100V ±1%; 6C605 can be DM19.
2. All resistors are: MEA Type ±1%, 1/8W.

Table 6-39. Component Values and Types, Model 210C-21 Output Filter Assembly

| Frequency Fc-CPS | 6R601 K | 6R602 K | 6R603 6R604 6R605 K | 6C601A Pf | 6C601B Pf | 6C602A Pf | 6C602B Pf | 6C603A Pf | 6C603B Pf |
|---|---|---|---|---|---|---|---|---|---|
| A 330- B 660 | 15.4 | 51.1 | 33.2 | 29100 | 14500 | 22800 | 11400 | 3740 | 1860 |
| A 450- B 900 | 15.4 | 51.1 | 33.2 | 21300 | 10600 | 16700 | 8340 | 2740 | 1360 |
| A 600- B 1200 | 15.4 | 51.1 | 33.2 | 16000 | 8000 | 12500 | 6260 | 2060 | 1030 |
| A 790- B 1600 | 15.4 | 51.1 | 33.2 | 12100 | 6000 | 9540 | 4700 | 1550 | 771 |
| A 1050- B 2100 | 15.4 | 51.1 | 33.2 | 9100 | 4580 | 7150 | 3600 | 1170 | 580 |
| A 1395 B 2790 | 15.4 | 51.1 | 33.2 | 6870 | 3450 | 5400 | 2700 | 886 | 442 |

Notes:

1. All resistors are MEA-TO 1/8W, 1%.
2. All capacitors are: 100-1000 Pf--EMR 600--DM15, 500V, 1%. 0.0011 to 0.39 µf MP1P, 200V, 2%. 0.391 to 0.68 µf Electro-Cube Type 212A--100V, 2%.
3. 6C601 = $\frac{9.6}{F_c}$ µf. 6C602 = $\frac{7.536}{F_c}$ µf. 6C603 = $\frac{1.23}{F_c}$ µf. ($F_c$ = cycles per second.)

Table 6-40. Component Value Formulas, Models 210T-01 and 210T-06 Reference Channel Selectors

| COMPONENT | FORMULAS |
|---|---|
| 5C203 | $\frac{6.75}{F_c D}$ μf |
| 5C204 | $\frac{67.6}{F_c D}$ μf (When $F_c D$ less than 220CPS) |
| 5C204 | $\frac{33.8}{F_c D}$ μf (When $F_c D$ greater than 220CPS) |
| 5C205 | $\frac{67.6}{F_c D}$ μf |
| 5C411 and 5C412 | $\frac{100}{F_c}$ μf |
| 5C601 | $\frac{29.3}{F_c D}$ μf |
| 5C602 | $\frac{26.0}{F_c D}$ μf |
| 5C603 | $\frac{10.1}{F_c D}$ μf |
| 5R420 | $\frac{0.3145}{0.1797-D}$ K ohm (When deviation less than 10%) |
| 5R420 | $\frac{0.1797}{0.1797-D}$ K ohm (When deviation greater than 10%) |
| 5R421 | 2.5K ohm (When deviation less than 10%) |
| 5R421 | 4.0K ohm (When deviation greater than 10%) |
| 5R422 | $\frac{0.3145}{D}$ K ohm (When deviation less than 10%) |
| 5R422 | $\frac{0.1797}{D}$ K ohm (When deviation greater than 10%) |

NOTES:

1. $F_c$ is center frequency in CPS.
2. D is deviation in decimal fraction.
3. Calculate value from formula and select type from component type table (see Table 6-41).

   Capacitors:

   A. 5C411 and 5C412 nearest 1% values.
   B. Sprague 150D Nearest 5% values.
   C. All others nearest 2% values.

   Resistors: Nearest 1% values

4. See Table 6-41 for 5C115, 5L101 and 5R136 (used on Model 210T-01 only)
5. Alternate types for Dearborn XIP capacitors:

   A. Arco MT
   B. Efcon HM-Z
   C. Sprague 127P

Table 6-41. Component Types, Models 210T-01 and 210T-06 Reference Channel Selectors

| COMPONENT | VALUE RANGE | MANUFACTURER & TYPE |
|---|---|---|
| 5C115 | Use 1000 Pf for units up to 3 Kc | Arco DM15, 100V |
| | Use 470 Pf for units from 3 Kc to 22 Kc | Arco DM15, 300V |
| | Use 47 Pf for units from 22 Kc to 100 Kc | Arco DM15, 500V |
| 5C203 | 0.15μf to 0.22μf | Dearborn MPIP, ±2%, 200V |
| | 0.005μf to 0.15μf | Dearborn XIP, ±2%, 200V |
| | 100 Pf to 5000 Pf | Arco DM19, ±2% |
| 5C204 | 1.1μf to 2.2μf | Sprague 150D, ±5%, 20V |
| | 0.33μf to 1.0μf | Sprague 150D, ±5%, 35V |
| | 0.005μf to 0.15μf | Dearborn XIP, ±2%, 200V |
| | 100 Pf to 5000 Pf | Arco DM19, ±2% |
| 5C205 | 1.1μf to 2.2μf | Sprague 150D, ±5%, 20V |
| | 0.33μf to 1.0μf | Sprague 150D, ±5%, 35V |
| 5C411 and 5C412 | 0.02μf to 0.25μf | Arco NT or Dearborn DAIP, ±2%, 200V |
| | 5000 Pf to 20,000 Pf | Arco DM30, ±2% |
| | 100 Pf to 5000 Pf | Arco DM19, ±2% |
| 5C601 | 0.005μf to 0.33μf | Dearborn XIP, ±2%, 200V |
| | 500 Pf to 5100 Pf | Arco DM19, ±2%, 500V |
| 5C602 | 0.005μf to 0.33μf | Dearborn XIP, ±2%, 200V |
| | 500 Pf to 5100 Pf | Arco DM19, ±2%, 500V |
| 5C603 | 0.005μf to 0.33μf | Dearborn XIP, ±2%, 200V |
| | 200 Pf to 5000 Pf | Arco DM19, ±2%, 500V |
| 5L101 | Use 1 millihenry for units up to 22 Kc | Delevan 2500, 135 milli-ampere |
| | Use 0.5 millihenry units from 22 Kc to 100 Kc | Delevan 2500, 170 milli-ampere |
| 5R136 | Use 2.7K for units up to 22 Kc | Allen Bradley CB, ±5% |
| | Use 1K for units from 22 Kc to 100 Kc | Allen Bradley CB, ±5% |

Table 6-42. Component Value Formulas, Models 210T-02 and 210T-07 Reference Channel Selectors

| COMPONENT | FORMULAS |
|---|---|
| 5C203 | $\frac{6.75}{F_c \text{ times } 0.075}$ µf |
| 5C204 | $\frac{67.6}{F_c \text{ times } 0.075}$ µf (When $F_c$ times 0.075 less than 220 CPS) |
| 5C204 | $\frac{33.8}{F_c \text{ times } 0.075}$ µf (When $F_c$ times 0.075 greater than 220CPS) |
| 5C205 | $\frac{67.6}{F_c \text{ times } 0.075}$ µf |
| 5C601 | $\frac{10.61}{DEV}$ µf |
| 5C602 | $\frac{6.116}{DEV}$ µf |
| 5C603 | $\frac{0.082}{F_c (Kc)}$ µf |
| 5C411 and 5C412 | $\frac{100}{F_c}$ µf |

NOTES:

1. $F_c$-center frequency in CPS.
2. DEV-deviation frequency in CPS.
3. Calculate value from formula and select type from component type table (see Table 6-43).

   Capacitors:

   A. 5C411 and 5C412 nearest 1% values.
   B. Sprague 150D nearest 5% values.
   C. All others nearest 2% values.

   Resistors: Nearest 1% values

4. See Table 6-43 for 5C115, 5L101 and 5R136 (used on Model 210T-02 only)
5. Alternate types for Dearborn XIP capacitors:

   A. Arco MT
   B. Efcon MH-Z
   C. Sprague 127P

Table 6-43. Component Types, Model 210T-03 and 210T-07 Reference Channel Selectors

| COMPONENT | VALUE RANGE | MANUFACTURER & TYPE |
|---|---|---|
| 5C115 | Use 1000 Pf for all units up to 3 Kc | Arco DM15, 100V |
| | Use 470 Pf for all units from 3 Kc to 22 Kc | Arco DM15, 300 V |
| | Use 47 Pf for all units from 22 Kc to 100 Kc | Arco DM15, 500V |
| | Use 10 Pf for all units above 100 Kc | Arco DM15, 500V |
| 5C411 and 5C412 | 0.02μf to 0.25μf | Arco NT or Dearborn DAIP, ±2%, 200V |
| | 5000 Pf to 20,000 Pf | Arco DM30, ±2% |
| | 100 Pf to 5000 Pf | Arco DM19, ±2% |
| 5C203 | 0.15μf to 0.22μf | Dearborn MPIP, ±2%, 200V |
| | 0.005μf to 0.15μf | Dearborn XIP, ±2%, 200V |
| | 100 Pf to 5000 Pf | Arco DM19, ±2% |
| 5C204 | 1.1μf to 2.2μf | Sprague 150D, ±5%, 20V |
| | 0.33μf to 1.0μf | Sprague 150D, ±5%, 35V |
| | 0.005μf to 0.15μf | Dearborn XIP, ±2%, 200V |
| | 100 Pf to 5000 Pf | Arco DM19, ±2% |
| 5C205 | 1.1μf to 2.2μf | Sprague 150D, ±5%, 20V |
| | 0.33μf to 1.0μf | Sprague 150D, ±5%, 35V |
| 5L101 | Use 1 millihenry for units up to 22 Kc | Delevan 2500, ±5%, 135 milli-ampere |
| | Use 0.5 millihenry for units from 22 Kc to 100 Kc | Delevan 2500, ±5%, 170 milli-ampere |
| 5C601 | 0.005μf to 0.33μf | Dearborn XIP, ±2%, 200V |
| | 500 Pf to 5100 Pf | Arco DM19, ±2%, 500V |
| 5C602 | 0.005μf to 0.33μf | Dearborn XIP, ±2%, 200V |
| | 200 Pf to 5000 Pf | Arco DM19, ±2%, 500V |
| 5C603 | 0.005μf to 0.33μf | Dearborn XIP, ±2%, 200V |
| | 200 Pf to 5000 Pf | Arco DM19, ±2%, 500V |
| 5R136 | Use 2.7K for units up to 22 Kc | Allen Bradley CB, ±5% |
| | Use 1K for units from 22 Kc to 100 Kc. | Allen Bradley CB, ±5% |

## Table 6-44. Component Value Formulas and Types, Models 210T-03 and 210T-08 Reference Channel Selectors

| COMPONENT | FORMULA |
|---|---|
| 5C203 | $\frac{90}{F_c}$ µf |
| 5C204 | $\frac{451}{F_c}$ µf |
| 5C205<br>5C601 | $\frac{20.5}{F_m}$ µf $\frac{67.6}{1}$ |
| 5C602 | $\frac{18.2}{F_m}$ µf |
| 5C603 | $\frac{7.07}{F_m}$ µf |
| 5C411 and<br>5C412 | $\frac{100}{F_c}$ µf |

Notes:

1. $F_c$ is center frequency in CPS.
2. Deviation equals ±7.5%.
3. $F_m = \frac{14720}{\Delta f}$ CPS
4. Calculate value from formula and select type from component type as identified below:

Capacitors

a. 5C411 and 5C412 nearest 1% values (Arco, DM19).

b. All others nearest 2% values (Arco, DM19).

Coil 5L101 (Model 210T-03 only)

| Value Range | Type |
|---|---|
| Use 1 mh for units up to 22 Kc | Delevan 2500, ±5%, 135 ma |
| Use 0.5 mh for units from 22 Kc to 100 Kc. | Delevan 2500, ±5%, 170 ma |

Resistor 5R136 (Model 210T-03 only)

| Value Range | Type |
|---|---|
| Use 2.7K for units up to 22 Kc | Allen Bradley CB, ±5% |
| Use 1K for units from 22 Kc to 100 Kc | Allen Bradley CB, ±5% |

NO: ME 2829 c.2

TITLE: Instruction Manual
EMR Model 210
SUBCARRIER DISCRIMINATOR
(REVISION J)

| NAME/PHONE/ORGANIZATION | DATE |
|---|---|
| ~~B. Lorenz / 2512 / 862.1~~ | ~~2/4~~ 21 Oct |
| ~~Kirby N 2980~~ | ~~3-13~~ |
| ~~C. Doggett 651~~ | ~~4/8/75~~ |
| ~~Kirby~~ | 4/28 |
| ~~R C Taylor 661~~ | ~~7/1/7~~ |

ME 2829